YAMAHA

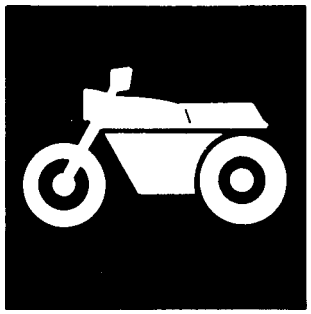

# PARTS CATALOGUE

# YZF–R1M (5JJ4) U49
# YZF–R1MC (5JJ5) CALIFORNIA
# YZF–R1M (5JJ6/5JJ3) CANADA,AUSTRALIA

YAMAHA GENUINE Parts & Accessories

2006-07-25

205JJ–100E2

| NEWS No. | DATE | COMMENT |
|---|---|---|
| PE0-MC-040134 | Oct.,19,2004 | FIG.17: TRANSMISSION LIST& ILLUSTRATION CORRECTION |
| PE0-MC-060079 | July.,25,2006 | FIG.1: CYLINDER LIST& ILLUSTRATION CORRECTION |

A2

A3

# FOREWORD

This Parts Catalogue is related to the parts for the model(s) in the below frame. When you are ordering replacement parts, please refer to this Parts Catalogue and quote both part numbers and part names correctly.

YZF–R1M(5JJ3/5JJ4/5JJ6)/YZF–R1MC(5JJ5)

1. Modifications or additions which have been made after issue of the Parts Catalogue will be announced in the Yamaha Parts News.
   It is advisable that you make necessary corrections to the Parts Catalogue according to the Yamaha Parts News.
2. Abbreviations
   The Following abbreviations are used in this Parts Catalogue.
   "UR" Use specified parts number.
   "UN" Use as many as needed.
   "AP" Alternate Parts
   "LM" Local Made (Parts need to be ordered locally)
   "F#" Frame No. (Applicable machine No.)
3. Parts, which are to be supplied in an assembly, are listed with a dot(.) in front of the part name as shown below.

   EXAMPLE
   CARBURETOR ASSY
   .JET, PILOT
   .NOZZLE, MAIN
4. Number of component for assembly
   The numeral appearing to the right of each component part indicates the quantity of parts for each assembly unit.

   EXAMPLE

| PART NO. | DESCRIPTION | Q'TY | REMARKS |
|---|---|---|---|
| 2F5–83310–60 | FRONT FLASHER LIGHT ASSY | 2 | |
| 115–83311–60 | .BULB (6V–18W) | 1 | |
| 1M1–83309–60 | .REFLECTOR | 1 | |

5. Applicable colors of graphics are represented in the "REMARKS" as shown below.

| PART NO. | DESCRIPTION | Q'TY | REMARKS |
|---|---|---|---|
| 2N4–24110–00–X5 | .FUEL TANK COMP. | 2 | MXR |
| 3J1–24240–10 | .GRAPHIC, FUEL TANK | 1 | for MXR |

6. Applicable Serial No.

   Engine Serial No.

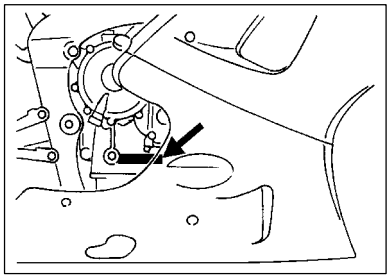

   Frame Serial No.

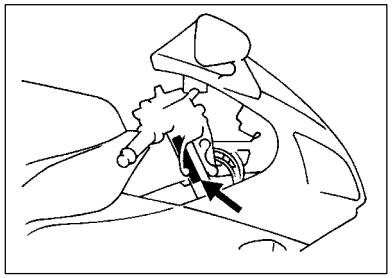

7. Note that the illustrations for reference in funding parts numbers, not to be used for assembling. When assembling, pleas use the applicable service manual.
8. The asterisk (*) before a reference number indicates modification items after the first edition.

# MODEL LABEL

(1) A label called “Model Label” is affixed in the location as indicated in (3) below. When using this parts catalogue, please be sure to cross–refer the “model code – production code No.” in the catalogue to the “model code – production code No. “indicated on the Model Label affixed onto the product concemed.

(2) “Model Label”Indication

| | |
|---|---|
| | a b |
| ○ | xxxx – xxx |
| ● | x c |

a: Model Type Code
b: Production Code No.
c: Colouring Type

| | |
|---|---|
| ○ | 4TW1–010 |
| ● | A |

(3) Model Label Affixing Location

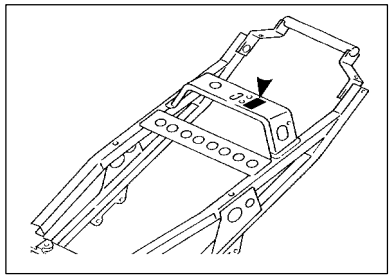

(4) Model Code – Production Code Number of Model Listed in This Parts Catalog

| Model Code | Production Code No. | Country (destination) | Model Code | Production Code No. | Country (destination) |
|---|---|---|---|---|---|
| 5JJ4 | 010 | U49 | | | |
| 5JJ5 | 010 | CALIFORNIA | | | |
| 5JJ6 | 010 | CANADA | | | |
| 5JJ3 | 010 | AUSTRALIA | | | |
| | | | | | |
| | | | | | |
| | | | | | |
| | | | | | |
| | | | | | |
| | | | | | |
| | | | | | |
| | | | | | |
| | | | | | |
| | | | | | |
| | | | | | |
| | | | | | |

(5) Colouring Information

| Colouring type code | Colour code | Colour Name | Abbrevi-ation |
|---|---|---|---|
| A | 0121 | VIVID RED COCKTAIL 1 | VRC1 |
| B | 0564 | DEEP PURPLISH BULE METALLIC C | DPBMC |

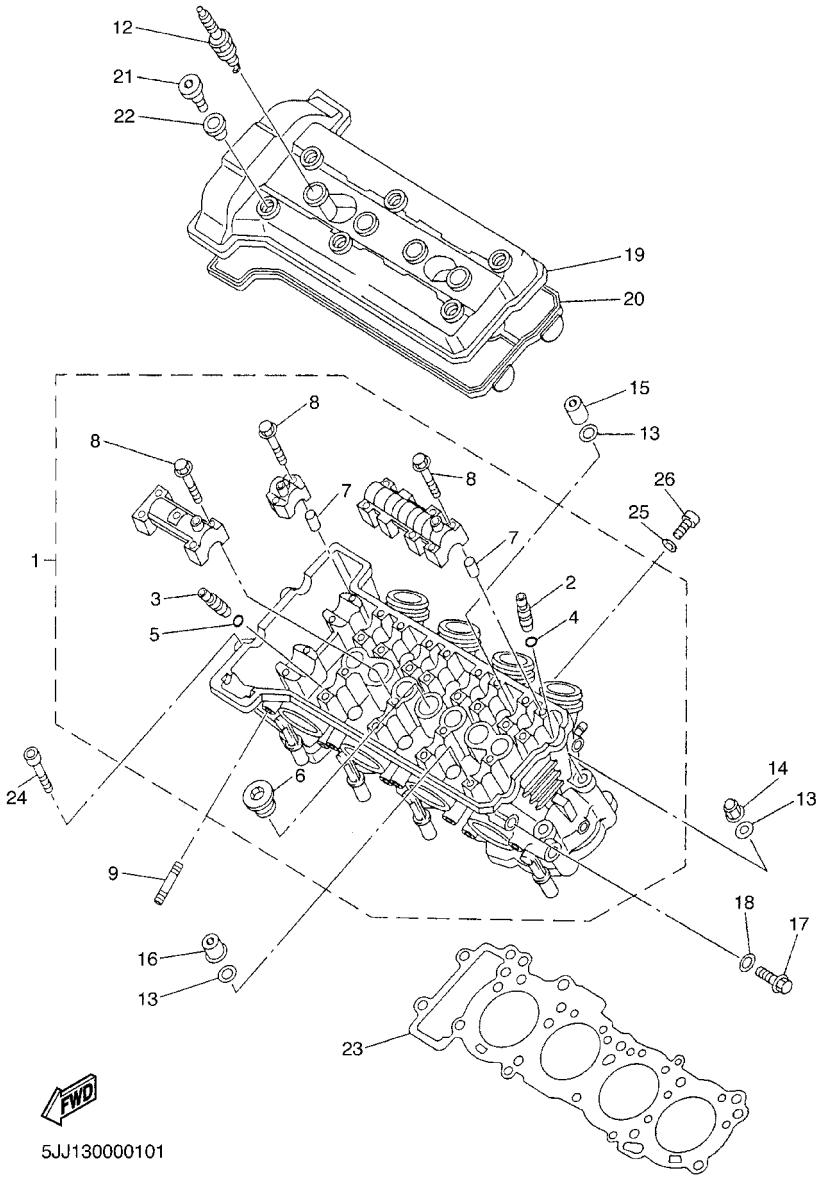


FIG. 1 CYLINDER

| REF. NO. | PART NO. | DESCRIPTION | 5JJ4 | 5JJ5 | 5JJ6 | 5JJ3 | | REMARKS |
|---|---|---|---|---|---|---|---|---|
| 1 | 5JJ–11101–01 | CYLINDER HEAD ASSY | 1 | 1 | 1 | 1 | | |
| 2 | 3TJ–11133–10 | .GUIDE, INTAKE VALVE | 12 | 12 | 12 | 12 | | |
| 3 | 1WG–11133–11 | .GUIDE, INTAKE VALVE | 8 | 8 | 8 | 8 | | |
| 4 | 93440–07149 | .CIRCLIP | 12 | 12 | 12 | 12 | | |
| 5 | 93440–10153 | .CIRCLIP | 8 | 8 | 8 | 8 | | |
| 6 | 90340–27001 | .PLUG, STRAIGHT SCREW | 1 | 1 | 1 | 1 | | |
| 7 | 91808–16023 | .PIN, DOWEL | 12 | 12 | 12 | 12 | | |
| 8 | 90105–06384 | .BOLT, WASHER BASED | 28 | 28 | 28 | 28 | | |
| 9 | 95617–08625 | BOLT, STUD | 8 | 8 | 8 | 8 | | |
| 12 | 94701–00318 | PLUG, SPARK (NGK R CR9E) | 4 | 4 | 4 | 4 | | UR |
| | 94701–00319 | PLUG, SPARK (ND U27ESR–N) | 4 | 4 | 4 | 4 | | UR |
| 13 | 90201–10013 | WASHER, PLATE | 10 | 10 | 10 | 10 | | |
| 14 | 90176–10075 | NUT, CROWN | 2 | 2 | 2 | 2 | | |
| 15 | 90179–10683 | NUT | 3 | 3 | 3 | 3 | | |
| 16 | 90179–10693 | NUT | 5 | 5 | 5 | 5 | | |
| 17 | 95027–06012 | BOLT, FLANGE | 1 | 1 | 1 | 1 | | |
| 18 | 90430–06014 | GASKET | 1 | 1 | 1 | 1 | | |
| 19 | 4XV–11191–00 | COVER, CYLINDER HEAD 1 | 1 | 1 | 1 | 1 | | |
| 20 | 4XV–11193–00 | GASKET, HEAD COVER 1 | 1 | 1 | 1 | 1 | | |
| 21 | 90109–066F0 | BOLT | 6 | 6 | 6 | 6 | | |
| 22 | 4KG–1111G–00 | RUBBER, MOUNT 1 | 6 | 6 | 6 | 6 | | |
| 23 | 4XV–11181–00 | GASKET, CYLINDER HEAD 1 | 1 | 1 | 1 | 1 | | |
| 24 | 91317–06060 | BOLT | 2 | 2 | 2 | 2 | | |
| 25 | 90430–06014 | GASKET | 3 | 3 | 3 | 3 | | |
| 26 | 91317–06012 | BOLT | 3 | 3 | 3 | 3 | | |

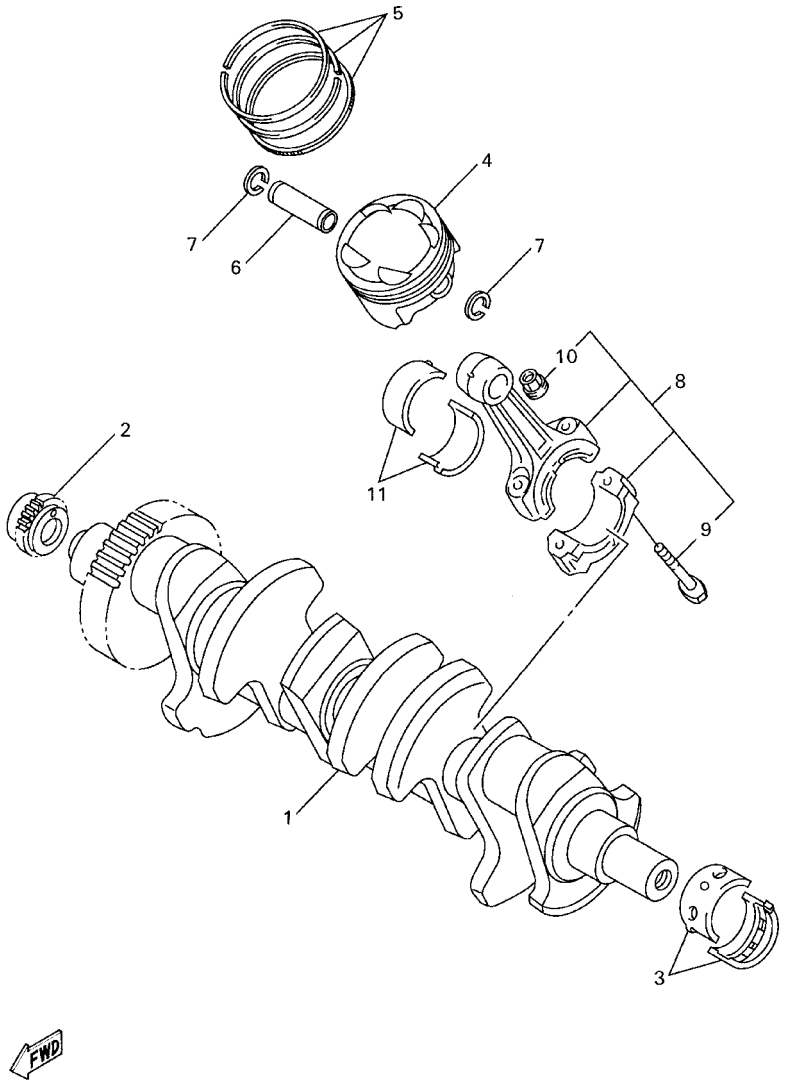


FIG. 2 CRANKSHAFT. PISTON

| REF. NO. | PART NO. | DESCRIPTION | 5JJ4 | 5JJ5 | 5JJ6 | 5JJ3 | | REMARKS |
|---|---|---|---|---|---|---|---|---|
| 1 | 4XV–11411–00 | CRANKSHAFT | 1 | 1 | 1 | 1 | | |
| 2 | 4XV–11549–00 | SPROCKET, CAM CHAIN | 1 | 1 | 1 | 1 | | |
| 3 | 3GM–11416–00 | PLANE BEARING, CRANKSHAFT 1 | 10 | 10 | 10 | 10 | | UR BLUE |
| | 3GM–11416–10 | PLANE BEARING, CRANKSHAFT 1 | 10 | 10 | 10 | 10 | | UR BLACK |
| | 3GM–11416–20 | PLANE BEARING, CRANKSHAFT 1 | 10 | 10 | 10 | 10 | | UR BROWN |
| | 3GM–11416–A0 | PLANE BEARING, CRANKSHAFT 1 | 10 | 10 | 10 | 10 | | UR WHITE |
| | 3GM–11416–B0 | PLANE BEARING, CRANKSHAFT 1 | 10 | 10 | 10 | 10 | | UR PURPLE |
| 4 | 4XV–11631–00 | PISTON (STD) | 4 | 4 | 4 | 4 | | |
| 5 | 4XV–11603–00 | PISTON RING SET (STD) | 4 | 4 | 4 | 4 | | |
| 6 | 4XV–11633–00 | PIN, PISTON | 4 | 4 | 4 | 4 | | |
| 7 | 90468–12069 | CLIP | 8 | 8 | 8 | 8 | | |
| 8 | 4XV–11650–00 | CONNECTING ROD ASSY | 4 | 4 | 4 | 4 | | |
| 9 | 4XV–11654–00 | .BOLT, CONNECTING ROD | 2 | 2 | 2 | 2 | | |
| 10 | 90179–08327 | .NUT | 2 | 2 | 2 | 2 | | |
| 11 | 3GM–11656–00 | PLANE BEARING, CONNECTING ROD | 8 | 8 | 8 | 8 | | UR BLUE |
| | 3GM–11656–10 | PLANE BEARING, CONNECTING ROD | 8 | 8 | 8 | 8 | | UR BLACK |
| | 3GM–11656–A0 | PLANE BEARING, CONNECTING ROD | 8 | 8 | 8 | 8 | | UR WHITE |
| | 3GM–11656–B0 | PLANE BEARING, CONNECTING ROD | 8 | 8 | 8 | 8 | | UR PURPLE |

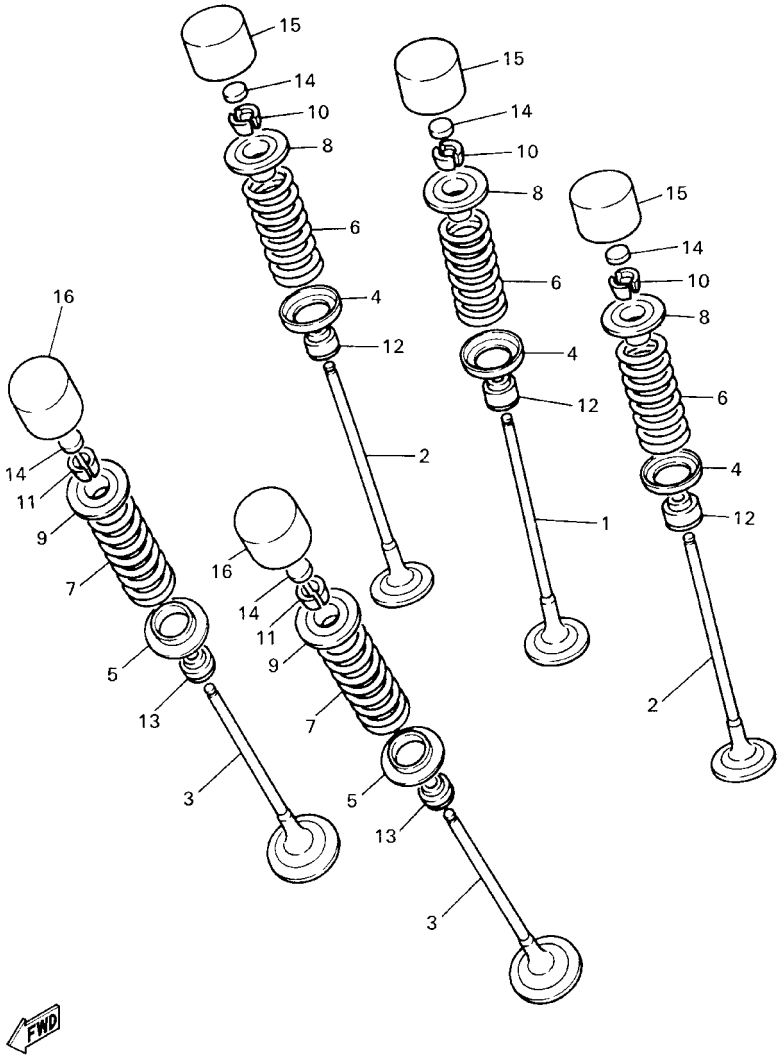


4XV352-8030

FIG. 3 VALVE

| REF. NO. | PART NO. | DESCRIPTION | 5JJ4 | 5JJ5 | 5JJ6 | 5JJ3 | | REMARKS |
|---|---|---|---|---|---|---|---|---|
| 1 | 4XV–12111–00 | VALVE, INTAKE | 4 | 4 | 4 | 4 | | |
| 2 | 4XV–12112–00 | VALVE, INTAKE 2 | 8 | 8 | 8 | 8 | | |
| 3 | 5JJ–12121–00 | VALVE, EXHAUST | 8 | 8 | 8 | 8 | | |
| 4 | 1HX–12116–00 | SEAT, VALVE SPRING | 12 | 12 | 12 | 12 | | |
| 5 | 3GM–12126–00 | SEAT, VALVE SPRING 2 | 8 | 8 | 8 | 8 | | |
| 6 | 4XV–12113–00 | SPRING, VALVE INNER | 12 | 12 | 12 | 12 | | |
| 7 | 4XV–12114–00 | SPRING, VALVE OUTER | 8 | 8 | 8 | 8 | | |
| 8 | 1HX–12117–00 | RETAINER, VALVE SPRING | 12 | 12 | 12 | 12 | | |
| 9 | 1WG–12117–00 | RETAINER, VALVE SPRING | 8 | 8 | 8 | 8 | | |
| 10 | 1HX–12118–00 | COTTER, VALVE | 24 | 24 | 24 | 24 | | |
| 11 | 1WG–12118–00 | COTTER, VALVE | 16 | 16 | 16 | 16 | | |
| 12 | 4TV–12119–00 | SEAL, VALVE STEM | 12 | 12 | 12 | 12 | | |
| 13 | 4SV–12119–00 | SEAL, VALVE STEM | 8 | 8 | 8 | 8 | | |
| 14 | 1HX–12168–00 | PAD, ADJUSTING 2 (1.20) | 20 | 20 | 20 | 20 | | UR |
| | 1HX–12168–20 | PAD, ADJUSTING 2 (1.25) | 20 | 20 | 20 | 20 | | UR |
| | 1HX–12168–40 | PAD, ADJUSTING 2 (1.30) | 20 | 20 | 20 | 20 | | UR |
| | 1HX–12168–60 | PAD, ADJUSTING 2 (1.35) | 20 | 20 | 20 | 20 | | UR |
| | 1HX–12168–80 | PAD, ADJUSTING 2 (1.40) | 20 | 20 | 20 | 20 | | UR |
| | 1HX–12168–A0 | PAD, ADJUSTING 2 (1.45) | 20 | 20 | 20 | 20 | | UR |
| | 1HX–12168–F0 | PAD, ADJUSTING 2 (1.50) | 20 | 20 | 20 | 20 | | UR |
| | 1HX–12168–H1 | PAD, ADJUSTING 2 (1.55) | 20 | 20 | 20 | 20 | | UR |
| | 1HX–12168–K1 | PAD, ADUSTING 2 (1.60) | 20 | 20 | 20 | 20 | | UR |
| | 1HX–12168–M1 | PAD, ADJUSTING 2 (1.65) | 20 | 20 | 20 | 20 | | UR |
| | 1HX–12168–R1 | PAD, ADJUSTING 2 (1.70) | 20 | 20 | 20 | 20 | | UR |
| | 1HX–12168–U1 | PAD, ADJUSTING 2 (1.75) | 20 | 20 | 20 | 20 | | UR |
| | 1HX–12168–W1 | PAD, ADJUSTING 2 (1.80) | 20 | 20 | 20 | 20 | | UR |
| | 1HX–12168–Y1 | PAD, ADJUSTING 2 (1.85) | 20 | 20 | 20 | 20 | | UR |

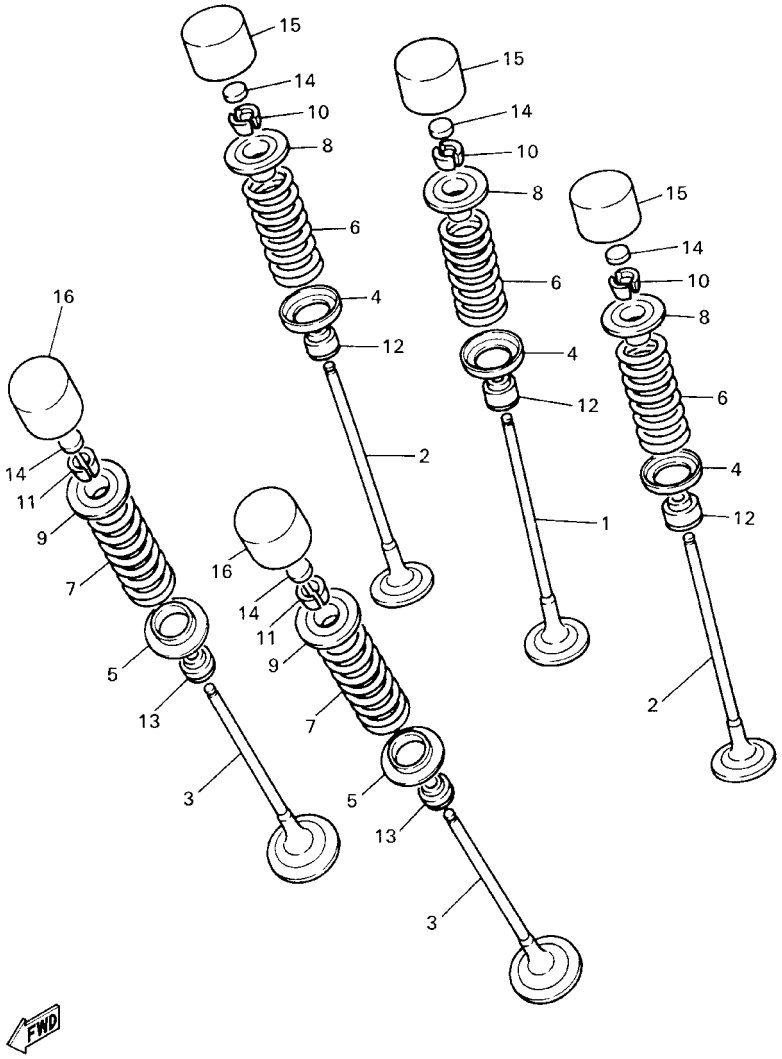


4XV352-8030

FIG. 3 VALVE

| REF. NO. | PART NO. | DESCRIPTION | 5JJ4 | 5JJ5 | 5JJ6 | 5JJ3 | | REMARKS |
|---|---|---|---|---|---|---|---|---|
| 14 | 1HX–12169–11 | PAD, ADJUSTING 2 (1.90) | 20 | 20 | 20 | 20 | | UR |
| | 1HX–12169–31 | PAD, ADJUSTING 2 (1.95) | 20 | 20 | 20 | 20 | | UR |
| | 1HX–12169–50 | PAD, ADJUSTING 2 (2.00) | 20 | 20 | 20 | 20 | | UR |
| | 1HX–12169–70 | PAD, ADJUSTING 2 (2.05) | 20 | 20 | 20 | 20 | | UR |
| | 1HX–12169–90 | PAD, ADJUSTING 2 (2.10) | 20 | 20 | 20 | 20 | | UR |
| | 1HX–12169–E0 | PAD, ADJUSTING 2 (2.15) | 20 | 20 | 20 | 20 | | UR |
| | 1HX–12169–G0 | PAD, ADJUSTING 2 (2.20) | 20 | 20 | 20 | 20 | | UR |
| | 1HX–12169–J0 | PAD, ADJUSTING 2 (2.25) | 20 | 20 | 20 | 20 | | UR |
| | 1HX–12169–L0 | PAD, ADJUSTING 2 (2.30) | 20 | 20 | 20 | 20 | | UR |
| | 1HX–12169–N0 | PAD, ADJUSTING 2 (2.35) | 20 | 20 | 20 | 20 | | UR |
| | 1HX–12169–T0 | PAD, ADJUSTING 2 (2.40) | 20 | 20 | 20 | 20 | | UR |
| 15 | 3LN–12153–20 | LIFTER, VALVE | 12 | 12 | 12 | 12 | | UR BLUE |
| | 3LN–12153–09 | LIFTER, VALVE (O/S) | 12 | 12 | 12 | 12 | | UR GREEN |
| 16 | 3FV–12153–20 | LIFTER, VALVE | 8 | 8 | 8 | 8 | | UR BLUE |
| | 3FV–12153–09 | LIFTER, VALVE (O/S) | 8 | 8 | 8 | 8 | | UR GREEN |

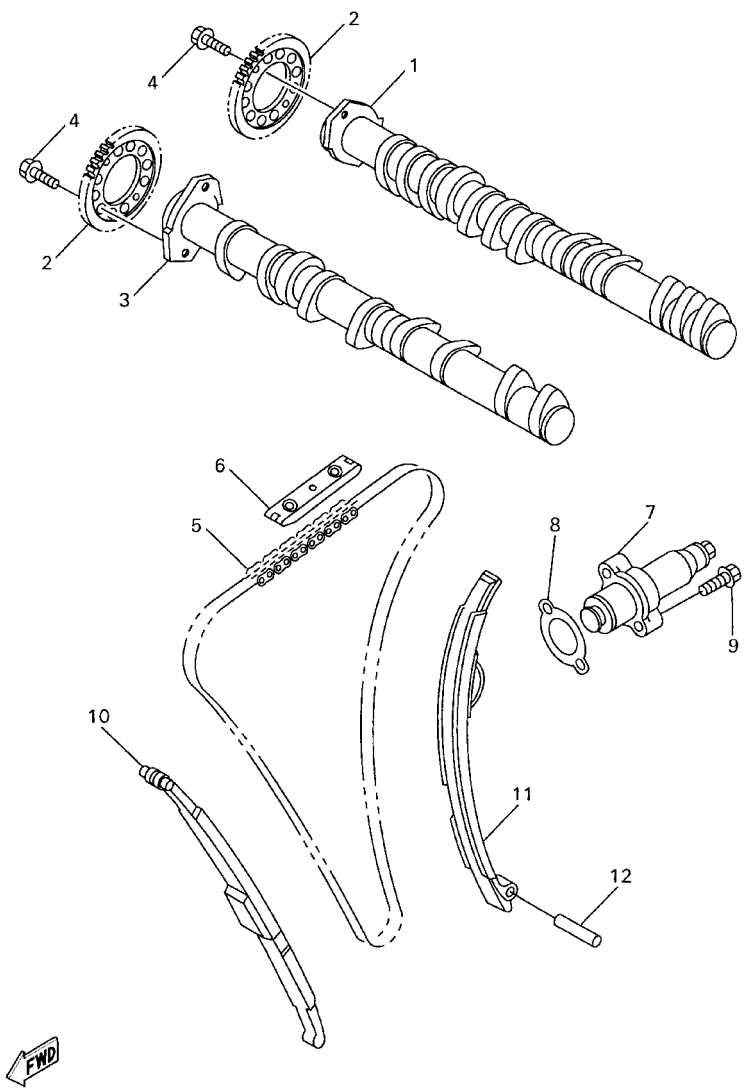


4XV352-8040

FIG. 4 CAMSHAFT. CHAIN

| REF. NO. | PART NO. | DESCRIPTION | 5JJ4 | 5JJ5 | 5JJ6 | 5JJ3 | | REMARKS |
|---|---|---|---|---|---|---|---|---|
| 1 | 5JJ–12171–00 | CAMSHAFT 1 | 1 | 1 | 1 | 1 | | |
| 2 | 4XV–12176–00 | SPROCKET, CAM CHAIN | 2 | 2 | 2 | 2 | | |
| 3 | 5JJ–12181–00 | CAMSHAFT 2 | 1 | 1 | 1 | 1 | | |
| 4 | 90105–07342 | BOLT, WASHER BASED | 4 | 4 | 4 | 4 | | |
| 5 | 94591–49130 | CHAIN | 1 | 1 | 1 | 1 | | |
| 6 | 5BE–12241–00 | GUIDE, STOPPER 2 | 1 | 1 | 1 | 1 | | |
| 7 | 4XV–12210–00 | TENSIONER ASSY, CAM CHAIN | 1 | 1 | 1 | 1 | | |
| 8 | 4FM–12213–00 | GASKET, TENSIONER CASE | 1 | 1 | 1 | 1 | | |
| 9 | 95027–06025 | BOLT, FLANGE | 2 | 2 | 2 | 2 | | |
| 10 | 4XV–12251–00 | DAMPER, CHAIN 1 | 1 | 1 | 1 | 1 | | |
| 11 | 4XV–12252–00 | DAMPER, CHAIN 2 | 1 | 1 | 1 | 1 | | |
| 12 | 93607–44190 | PIN, DOWEL | 1 | 1 | 1 | 1 | | |

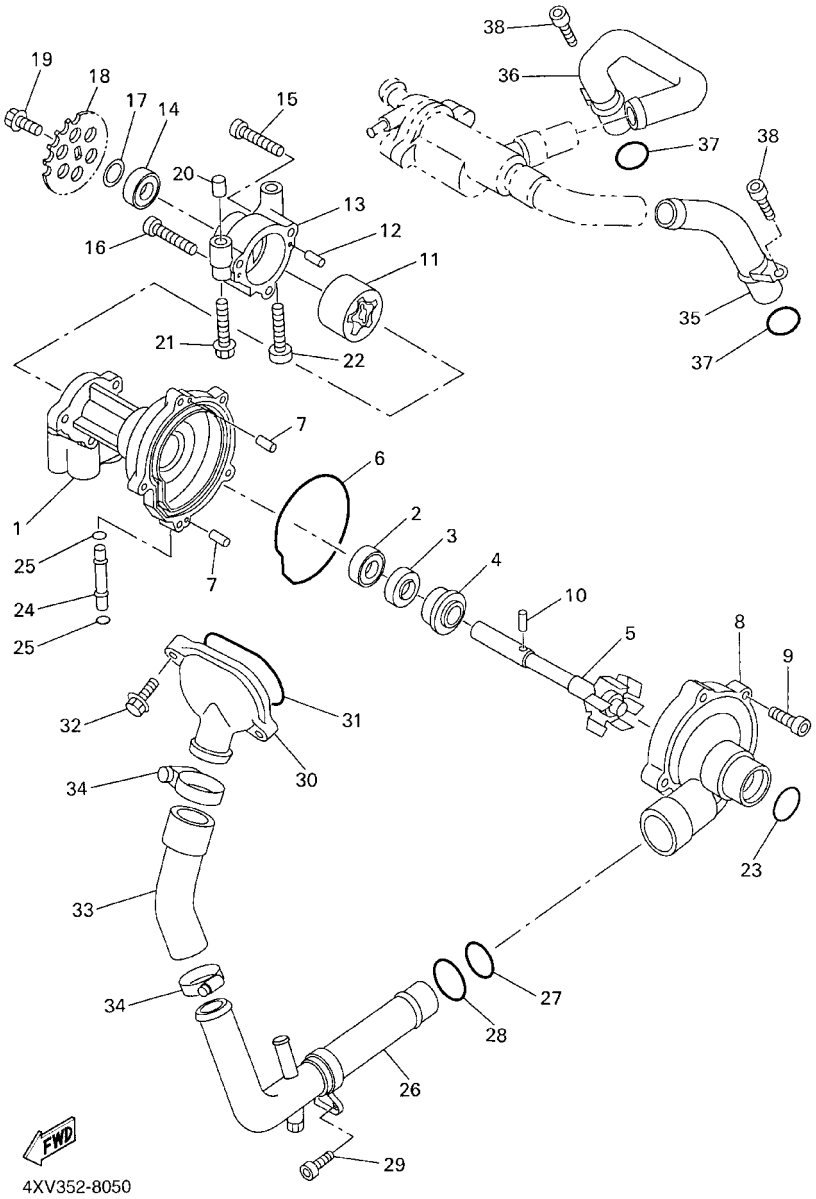


FIG. 5 WATER PUMP

| REF. NO. | PART NO. | DESCRIPTION | 5JJ4 | 5JJ5 | 5JJ6 | 5JJ3 | | REMARKS |
|---|---|---|---|---|---|---|---|---|
| 1 | 4XV–12421–00 | HOUSING, WATER PUMP | 1 | 1 | 1 | 1 | | |
| 2 | 93306–00106 | BEARING | 1 | 1 | 1 | 1 | | |
| 3 | 93102–12372 | OIL SEAL | 1 | 1 | 1 | 1 | | |
| 4 | 11H–12438–00 | SEAL, MECHANICAL | 1 | 1 | 1 | 1 | | |
| 5 | 4XV–12450–00 | IMPELLER SHAFT ASSY | 1 | 1 | 1 | 1 | | |
| 6 | 4XV–12439–00 | O–RING | 1 | 1 | 1 | 1 | | |
| 7 | 93604–10011 | PIN, DOWEL | 2 | 2 | 2 | 2 | | |
| 8 | 4XV–12422–00 | COVER, HOUSING | 1 | 1 | 1 | 1 | | |
| 9 | 91317–06025 | BOLT | 5 | 5 | 5 | 5 | | |
| 10 | 93603–17070 | PIN, DOWEL | 1 | 1 | 1 | 1 | | |
| 11 | 4XV–13310–00 | ROTOR ASSY 1 | 1 | 1 | 1 | 1 | | |
| 12 | 93603–12007 | PIN, DOWEL | 2 | 2 | 2 | 2 | | |
| 13 | 4XV–13336–00 | HOUSING, ROTOR | 1 | 1 | 1 | 1 | | |
| 14 | 93306–00106 | BEARING | 1 | 1 | 1 | 1 | | |
| 15 | 91317–06035 | BOLT | 2 | 2 | 2 | 2 | | |
| 16 | 91317–06040 | BOLT | 1 | 1 | 1 | 1 | | |
| 17 | 90201–12541 | WASHER, PLATE | 1 | 1 | 1 | 1 | | |
| 18 | 4XV–13355–00 | SPROCKET, DRIVEN | 1 | 1 | 1 | 1 | | |
| 19 | 90105–06154 | BOLT, WASHER BASED | 1 | 1 | 1 | 1 | | |
| 20 | 91808–30031 | PIN, DOWEL | 1 | 1 | 1 | 1 | | |
| 21 | 95817–06045 | BOLT, FLANGE | 1 | 1 | 1 | 1 | | |
| 22 | 91317–06045 | BOLT | 1 | 1 | 1 | 1 | | |
| 23 | 93210–357A2 | O–RING | 1 | 1 | 1 | 1 | | |
| 24 | 4XV–12485–00 | PIPE 5 | 1 | 1 | 1 | 1 | | |
| 25 | 93210–06667 | O–RING | 2 | 2 | 2 | 2 | | |
| 26 | 5JJ–12481–00 | PIPE 1 | 1 | 1 | 1 | 1 | | |
| 27 | 93210–235A1 | O–RING | 1 | 1 | 1 | 1 | | |

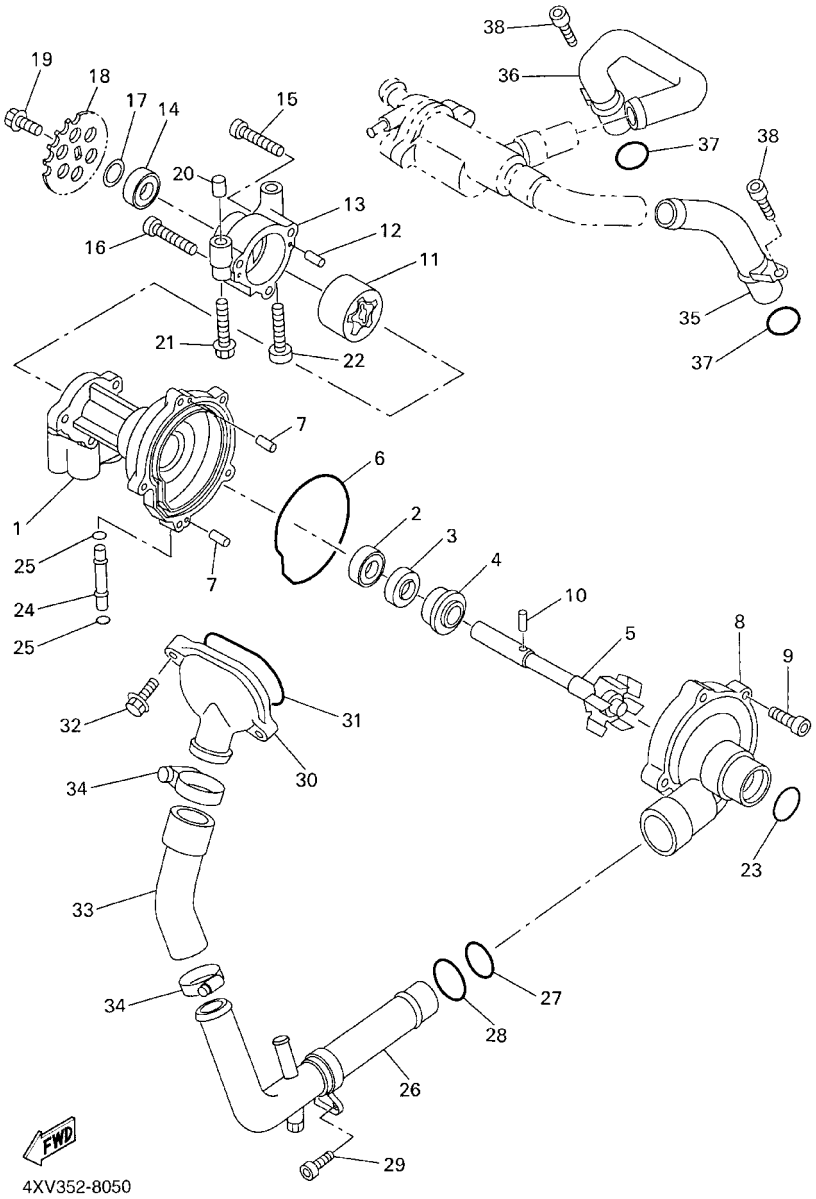


FIG. 5 WATER PUMP

| REF. NO. | PART NO. | DESCRIPTION | 5JJ4 | 5JJ5 | 5JJ6 | 5JJ3 | | REMARKS |
|---|---|---|---|---|---|---|---|---|
| 28 | 93210–27370 | O–RING | 1 | 1 | 1 | 1 | | |
| 29 | 90110–06226 | BOLT, HEXAGON SOCKET HEAD | 1 | 1 | 1 | 1 | | |
| 30 | 5JJ–12469–00 | JOINT 1 | 1 | 1 | 1 | 1 | | |
| 31 | 93210–47675 | O–RING | 1 | 1 | 1 | 1 | | |
| 32 | 95027–06020 | BOLT, FLANGE | 2 | 2 | 2 | 2 | | |
| 33 | 5JJ–12576–00 | HOSE 1 | 1 | 1 | 1 | 1 | | |
| 34 | 90450–38040 | HOSE CLAMP ASSY | 2 | 2 | 2 | 2 | | |
| 35 | 4XV–12482–00 | PIPE 2 | 1 | 1 | 1 | 1 | | |
| 36 | 4XV–12483–00 | PIPE 3 | 1 | 1 | 1 | 1 | | |
| 37 | 93210–18417 | O–RING | 2 | 2 | 2 | 2 | | |
| 38 | 91317–06016 | BOLT | 2 | 2 | 2 | 2 | | |

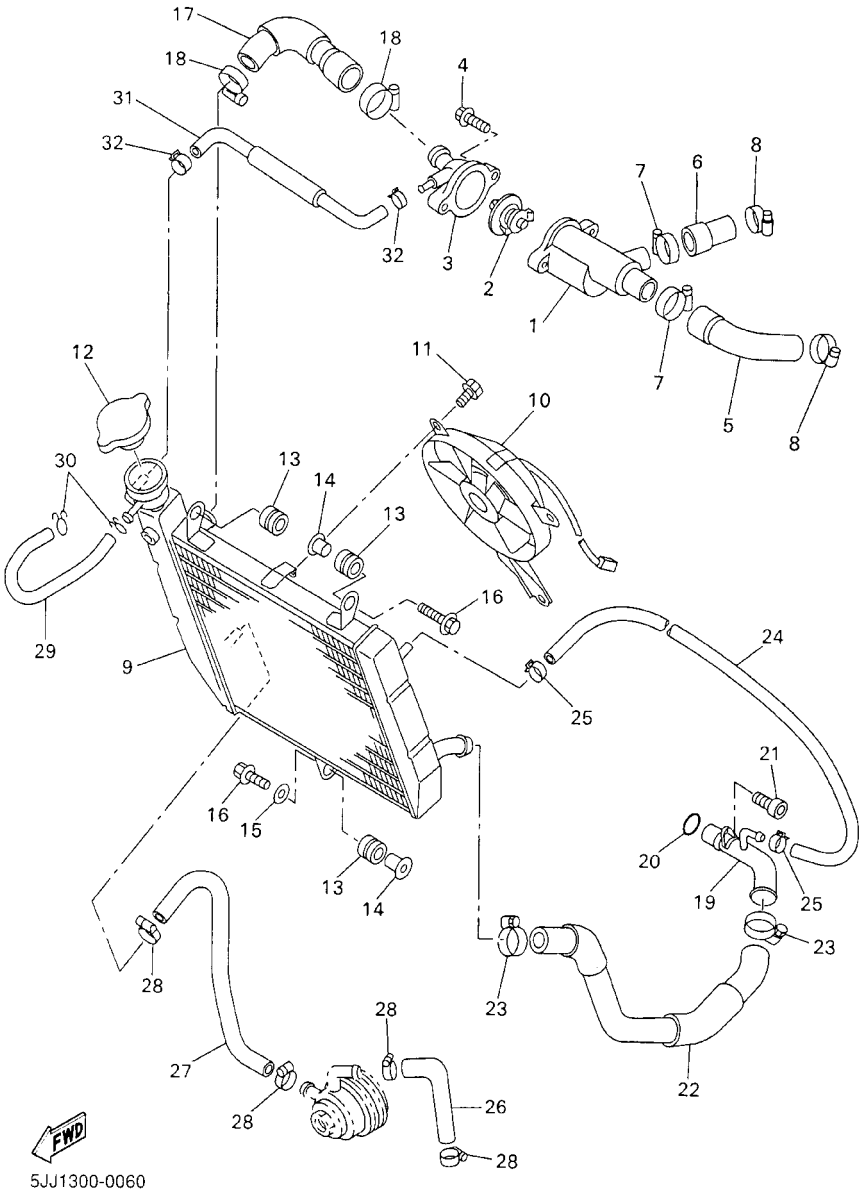


FIG. 6 RADIATOR. HOSE

| REF. NO. | PART NO. | DESCRIPTION | 5JJ4 | 5JJ5 | 5JJ6 | 5JJ3 | | REMARKS |
|---|---|---|---|---|---|---|---|---|
| 1 | 4XV–12417–00 | HOUSING, THERMOSTAT | 1 | 1 | 1 | 1 | | |
| 2 | 4FM–12410–00 | THERMOSTAT ASSY | 1 | 1 | 1 | 1 | | |
| 3 | 4XV–12413–00 | COVER, THERMOSTAT | 1 | 1 | 1 | 1 | | |
| 4 | 95027–06025 | BOLT, FLANGE | 2 | 2 | 2 | 2 | | |
| 5 | 4XV–12577–00 | HOSE 2 | 1 | 1 | 1 | 1 | | |
| 6 | 4XV–12578–00 | HOSE 3 | 1 | 1 | 1 | 1 | | |
| 7 | 90450–32015 | HOSE CLAMP ASSY | 2 | 2 | 2 | 2 | | |
| 8 | 90450–28014 | HOSE CLAMP ASSY | 2 | 2 | 2 | 2 | | |
| 9 | 5JJ–12461–00 | RADIATOR ASSY | 1 | 1 | 1 | 1 | | |
| 10 | 4XV–12405–00 | BLOWER ASSY | 1 | 1 | 1 | 1 | | |
| 11 | 95817–06010 | BOLT, FLANGE | 6 | 6 | 6 | 6 | | |
| 12 | 4JH–12462–00 | CAP, RADIATOR | 1 | 1 | 1 | 1 | | |
| 13 | 90480–15363 | GROMMET | 3 | 3 | 3 | 3 | | |
| 14 | 90387–07391 | COLLAR | 2 | 2 | 2 | 2 | | |
| 15 | 90201–06071 | WASHER, PLATE | 1 | 1 | 1 | 1 | | |
| 16 | 95827–06025 | BOLT, FLANGE | 2 | 2 | 2 | 2 | | |
| 17 | 4XV–12579–00 | HOSE 4 | 1 | 1 | 1 | 1 | | |
| 18 | 90450–38040 | HOSE CLAMP ASSY | 2 | 2 | 2 | 2 | | |
| 19 | 4XV–12484–00 | PIPE 4 | 1 | 1 | 1 | 1 | | |
| 20 | 93210–23787 | O–RING | 1 | 1 | 1 | 1 | | |
| 21 | 90110–06226 | BOLT, HEXAGON SOCKET HEAD | 1 | 1 | 1 | 1 | | |
| 22 | 4XV–12551–00 | HOSE 7 | 1 | 1 | 1 | 1 | | |
| 23 | 90450–38040 | HOSE CLAMP ASSY | 2 | 2 | 2 | 2 | | |
| 24 | 4XV–1243A–00 | HOSE 1 | 1 | 1 | 1 | 1 | | |
| 25 | 90467–11090 | CLIP | 2 | 2 | 2 | 2 | | |
| 26 | 5JJ–12588–00 | HOSE 5 | 1 | 1 | 1 | 1 | | |
| 27 | 5JJ–12589–00 | HOSE 6 | 1 | 1 | 1 | 1 | | |

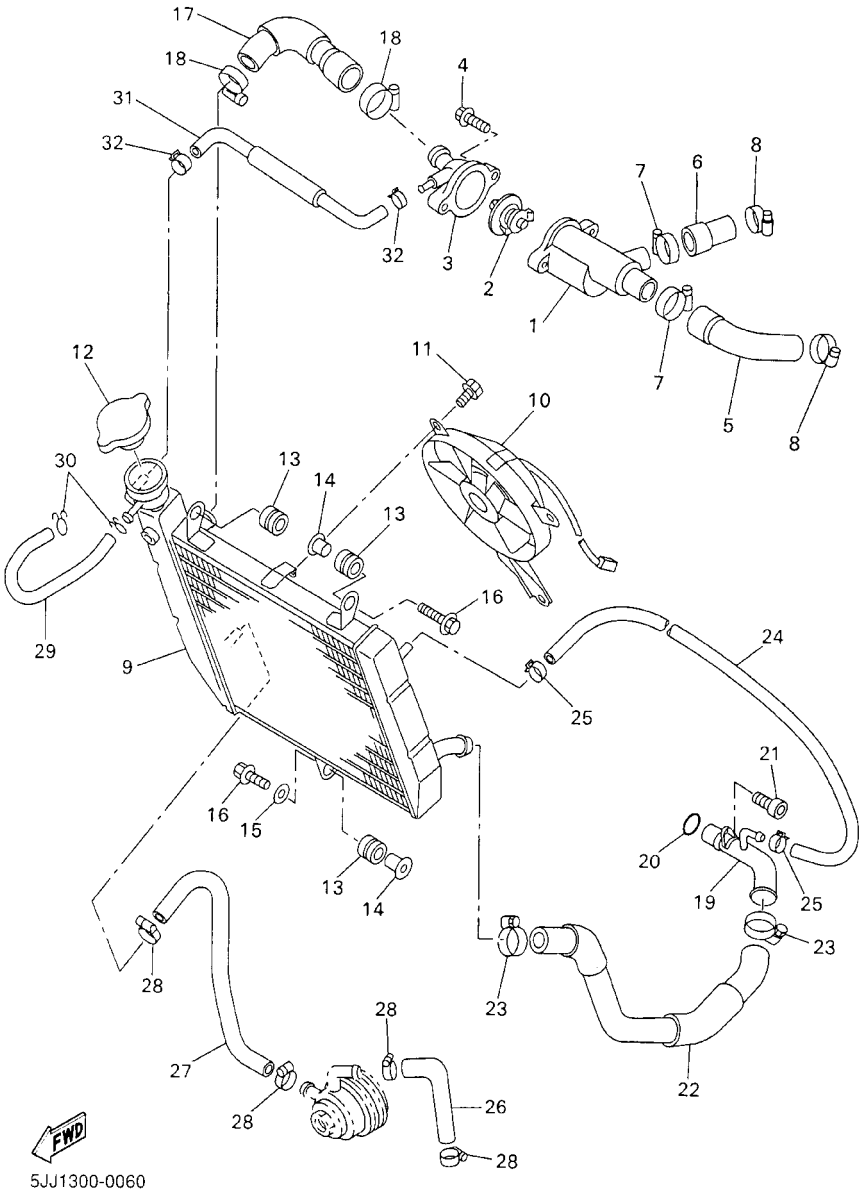


FIG. 6 RADIATOR. HOSE

| REF. NO. | PART NO. | DESCRIPTION | 5JJ4 | 5JJ5 | 5JJ6 | 5JJ3 | | REMARKS |
|---|---|---|---|---|---|---|---|---|
| 28 | 90450–22017 | HOSE CLAMP ASSY | 4 | 4 | 4 | 4 | | |
| 29 | 90445–09074 | HOSE (L130) | 1 | 1 | 1 | 1 | | |
| 30 | 90467–08003 | CLIP | 2 | 2 | 2 | 2 | | |
| 31 | 4XV–12552–00 | HOSE 8 | 1 | 1 | 1 | 1 | | |
| 32 | 90467–11090 | CLIP | 2 | 2 | 2 | 2 | | |

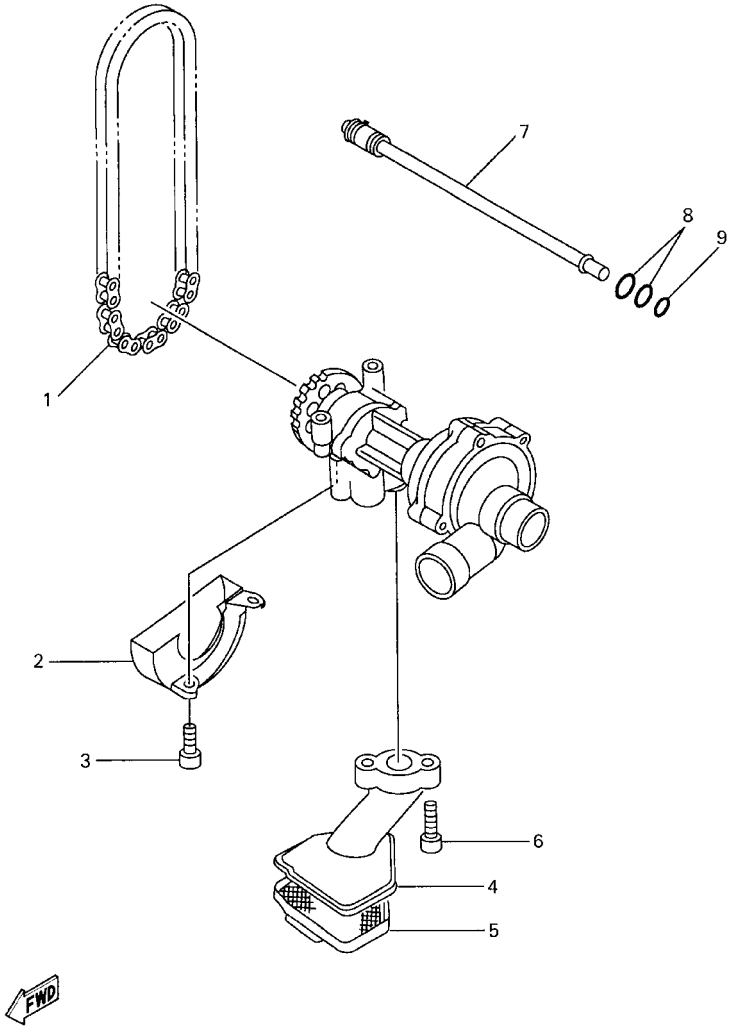


FIG. 7 OIL PUMP

| REF. NO. | PART NO. | DESCRIPTION | 5JJ4 | 5JJ5 | 5JJ6 | 5JJ3 | | REMARKS |
|---|---|---|---|---|---|---|---|---|
| 1 | 94580–25078 | CHAIN (DID25 78LE) | 1 | 1 | 1 | 1 | | |
| 2 | 4XV–13327–00 | COVER, PUMP GEAR | 1 | 1 | 1 | 1 | | |
| 3 | 91317–06012 | BOLT | 1 | 1 | 1 | 1 | | |
| 4 | 4XV–13412–00 | HOUSING, STRAINER | 1 | 1 | 1 | 1 | | |
| 5 | 4XV–13411–00 | STRAINER, OIL | 1 | 1 | 1 | 1 | | |
| 6 | 91317–06020 | BOLT | 2 | 2 | 2 | 2 | | |
| 7 | 5JJ–1316E–00 | PIPE, DELEVERY 5 | 1 | 1 | 1 | 1 | | |
| 8 | 93210–09165 | O–RING | 2 | 2 | 2 | 2 | | |
| 9 | 93210–06667 | O–RING | 1 | 1 | 1 | 1 | | |

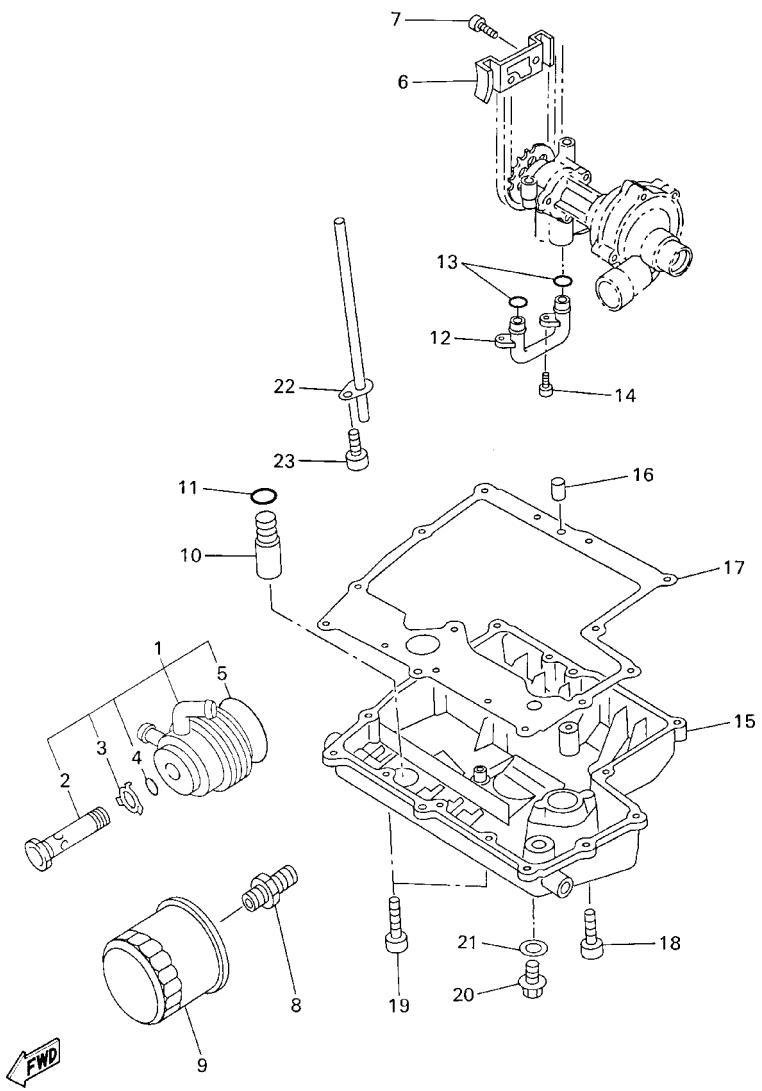


4XV352-8081

FIG. 8 OIL CLEANER

| REF. NO. | PART NO. | DESCRIPTION | 5JJ4 | 5JJ5 | 5JJ6 | 5JJ3 | | REMARKS |
|---|---|---|---|---|---|---|---|---|
| 1 | 5JJ–13470–00 | OIL COOLER ASSY | 1 | 1 | 1 | 1 | | |
| 2 | 4XV–12822–00 | .BOLT, UNION | 1 | 1 | 1 | 1 | | |
| 3 | 4XV–13473–00 | .O–RING | 1 | 1 | 1 | 1 | | |
| 4 | 4XV–13318–00 | .WASHER | 1 | 1 | 1 | 1 | | |
| 5 | 4XV–13475–00 | .GASKET | 1 | 1 | 1 | 1 | | |
| 6 | 4XV–13898–00 | HOLDER | 1 | 1 | 1 | 1 | | |
| 7 | 91317–06012 | BOLT | 1 | 1 | 1 | 1 | | |
| 8 | 90401–20145 | BOLT, UNION | 1 | 1 | 1 | 1 | | |
| 9 | 5GH–13440–00 | ELEMENT ASSY, OIL CLEANER | 1 | 1 | 1 | 1 | | |
| 10 | 4XV–13490–00 | RELIEF VALVE ASSY | 1 | 1 | 1 | 1 | | |
| 11 | 93210–15566 | O–RING | 1 | 1 | 1 | 1 | | |
| 12 | 4XV–13416–00 | PIPE, OIL 1 | 1 | 1 | 1 | 1 | | |
| 13 | 93210–14579 | O–RING | 2 | 2 | 2 | 2 | | |
| 14 | 91317–06012 | BOLT | 2 | 2 | 2 | 2 | | |
| 15 | 4XV–13417–01 | COVER, STRAINER | 1 | 1 | 1 | 1 | | |
| 16 | 99530–08012 | PIN, DOWEL | 2 | 2 | 2 | 2 | | |
| 17 | 4XV–13414–00 | GASKET, STRAINER COVER | 1 | 1 | 1 | 1 | | |
| 18 | 91317–06025 | BOLT | 13 | 13 | 13 | 13 | | |
| 19 | 90110–06225 | BOLT, HEXAGON SOCKET HEAD | 2 | 2 | 2 | 2 | | |
| 20 | 90340–14132 | PLUG, STRAIGHT SCREW | 1 | 1 | 1 | 1 | | |
| 21 | 214–11198–01 | GASKET | 1 | 1 | 1 | 1 | | |
| 22 | 5JJ–13161–00 | PIPE, DELIVERY 1 | 1 | 1 | 1 | 1 | | |
| 23 | 91317–06012 | BOLT | 1 | 1 | 1 | 1 | | |

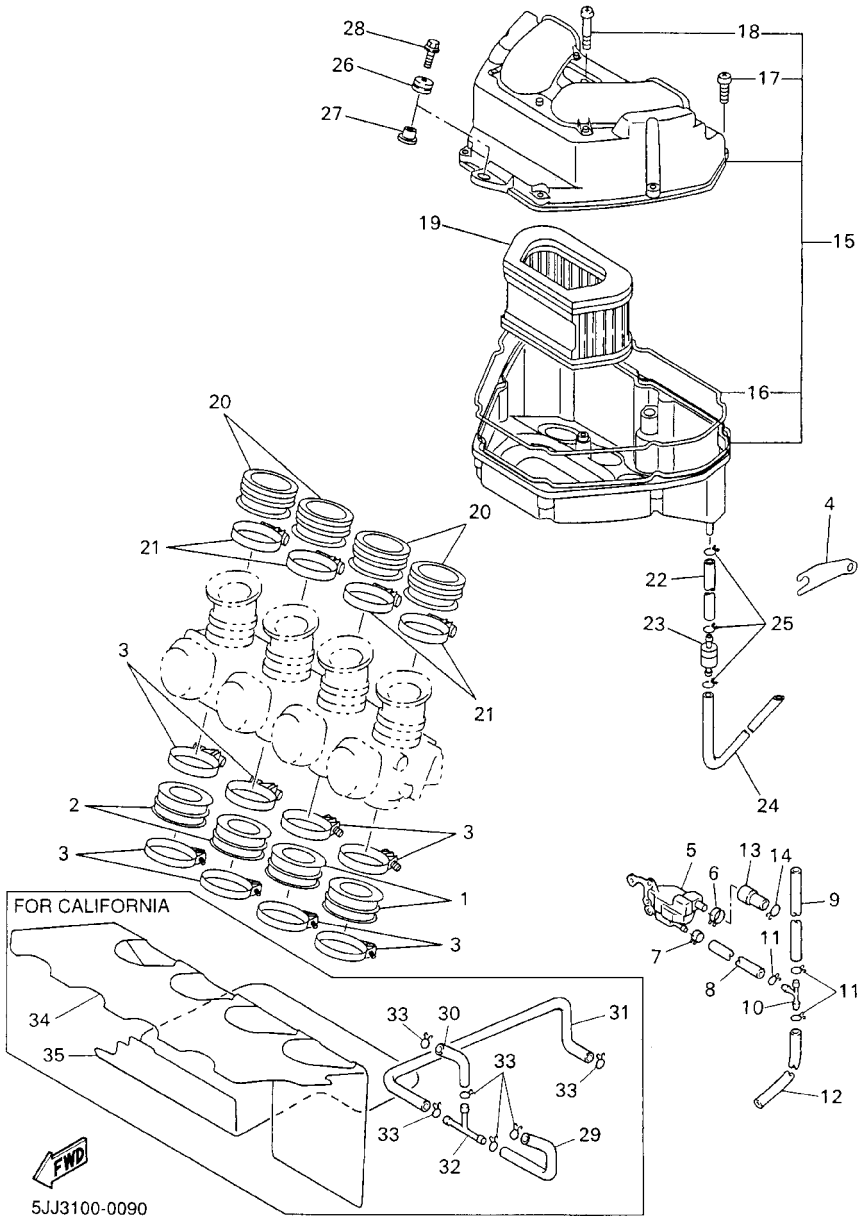


FIG. 9 INTAKE

| REF. NO. | PART NO. | DESCRIPTION | 5JJ4 | 5JJ5 | 5JJ6 | 5JJ3 | | REMARKS |
|---|---|---|---|---|---|---|---|---|
| 1 | 4XV–13597–00 | JOINT, CARBURETOR 3 | 2 | 2 | 2 | 2 | | |
| 2 | 4XV–13598–00 | JOINT, CARBURETOR 4 | 2 | 2 | 2 | 2 | | |
| 3 | 90450–57044 | HOSE CLAMP ASSY | 8 | 8 | 8 | 8 | | |
| 4 | 5JJ–14414–00 | STAY 2 | 1 | 1 | 1 | 1 | | |
| 5 | 5JJ–1446A–00 | SURGE TANK ASSY | 1 | 1 | 1 | 1 | | |
| 6 | 90467–16098 | CLIP | 1 | 1 | 1 | 1 | | |
| 7 | 90467–11090 | CLIP | 1 | 1 | 1 | 1 | | |
| 8 | 90445–11730 | HOSE (L280) | 1 | 1 | 1 | 1 | | |
| 9 | 90445–10143 | HOSE | 1 | 1 | 1 | 1 | | |
| 10 | 90413–07007 | WAY 3 | 1 | 1 | 1 | 1 | | |
| 11 | 90467–10041 | CLIP | 3 | 3 | 3 | 3 | | |
| 12 | 90445–117K0 | HOSE | 1 | 1 | 1 | 1 | | |
| 13 | 5JJ–14294–00 | HOSE | 1 | 1 | 1 | 1 | | |
| 14 | 90467–13042 | CLIP | 1 | 1 | 1 | 1 | | |
| 15 | 5JJ–14401–00 | AIR CLEANER CASE ASSY | 1 | 1 | 1 | 1 | | |
| 16 | 4XV–14452–00 | .SEAL | 1 | 1 | 1 | 1 | | |
| 17 | 98507–05025 | .SCREW, PAN HEAD | 7 | 7 | 7 | 7 | | |
| 18 | 98507–05045 | .SCREW, PAN HEAD | 1 | 1 | 1 | 1 | | |
| 19 | 4XV–14451–00 | ELEMENT, AIR CLEANER | 1 | 1 | 1 | 1 | | |
| 20 | 5JJ–14453–00 | JOINT, AIR CLEANER 1 | 4 | 4 | 4 | 4 | | |
| 21 | 90450–75083 | HOSE CLAMP ASSY | 4 | 4 | 4 | 4 | | |
| 22 | 90445–11452 | HOSE (L125) | 1 | 1 | 1 | 1 | | |
| 23 | 4X7–2149Y–00 | FILTER ASSY | 1 | 1 | 1 | 1 | | |
| 24 | 90445–11013 | HOSE | 1 | 1 | 1 | 1 | | |
| 25 | 90467–10041 | CLIP | 3 | 3 | 3 | 3 | | |
| 26 | 90480–12314 | GROMMET | 1 | 1 | 1 | 1 | | |
| 27 | 90387–065J6 | COLLAR | 1 | 1 | 1 | 1 | | |

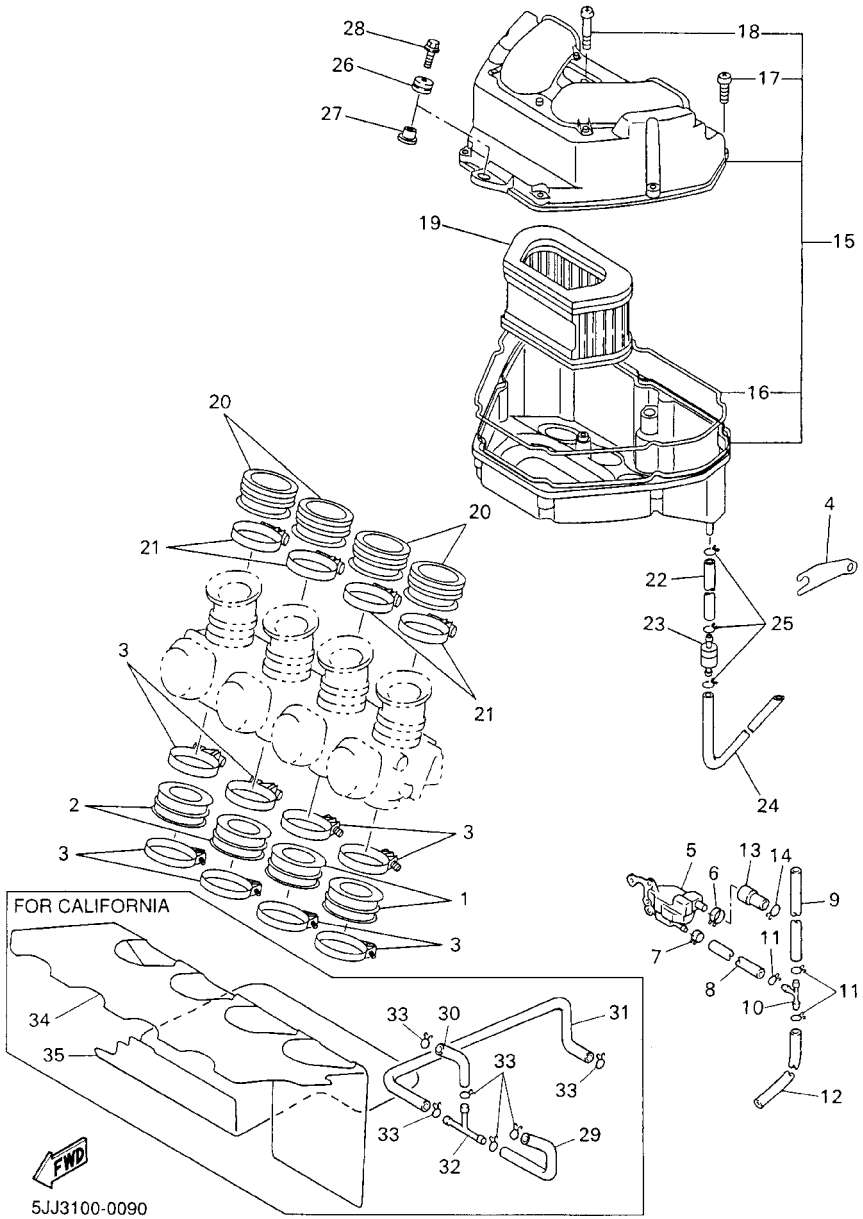


FIG. 9 INTAKE

| REF. NO. | PART NO. | DESCRIPTION | 5JJ4 | 5JJ5 | 5JJ6 | 5JJ3 | | REMARKS |
|---|---|---|---|---|---|---|---|---|
| 28 | 95817–06020 | BOLT, FLANGE | 1 | 1 | 1 | 1 | | |
| 29 | 4XV–14465–00 | PIPE | | 1 | | | | |
| 30 | 4XV–14466–00 | PIPE | | 1 | | | | |
| 31 | 4XV–1443J–00 | PIPE | | 1 | | | | |
| 32 | 90413–08012 | WAY 3 | | 1 | | | | |
| 33 | 90467–10008 | CLIP | | 6 | | | | |
| 34 | 5JJ–12682–00 | PROTECTOR, HEAT | | 1 | | | | |
| 35 | 5JJ–12683–00 | PROTECTOR, HEAT | | 1 | | | | |

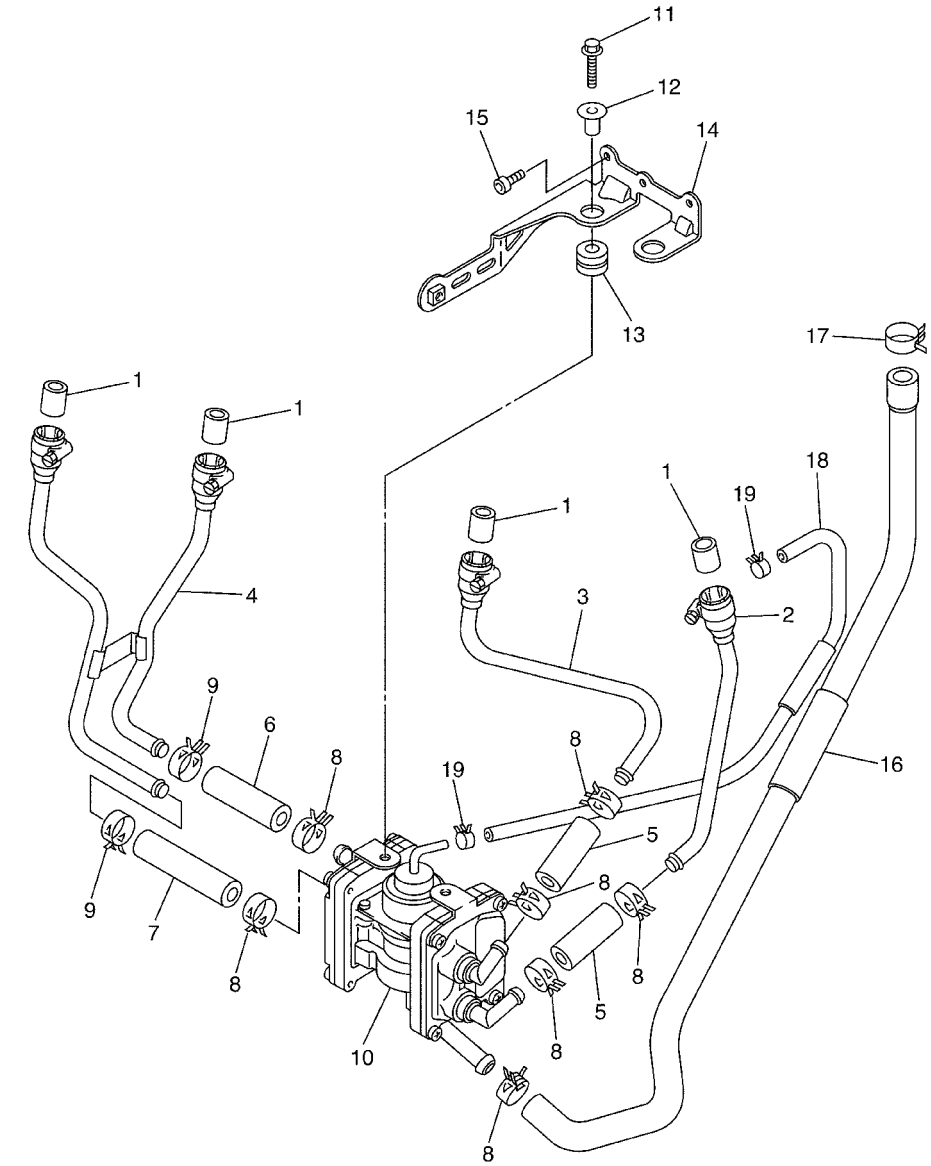


5JJ1300-0100

FIG. 10 AIR INDUCTION SYSTEM

| REF. NO. | PART NO. | DESCRIPTION | 5JJ4 | 5JJ5 | 5JJ6 | 5JJ3 | | REMARKS |
|---|---|---|---|---|---|---|---|---|
| 1 | 4KM–14714–01 | GASKET, MUFFLER | 4 | 4 | 4 | 4 | | |
| 2 | 5JJ–14872–00 | PIPE 2 | 1 | 1 | 1 | 1 | | |
| 3 | 5JJ–14873–00 | PIPE 3 | 1 | 1 | 1 | 1 | | |
| 4 | 5JJ–14874–00 | PIPE 4 | 1 | 1 | 1 | 1 | | |
| 5 | 5JJ–14882–00 | HOSE, BEND 2 | 2 | 2 | 2 | 2 | | |
| 6 | 5JJ–14883–00 | HOSE, BEND 3 | 1 | 1 | 1 | 1 | | |
| 7 | 5JJ–14886–00 | HOSE, BEND 6 | 1 | 1 | 1 | 1 | | |
| 8 | 90467–15054 | CLIP | 7 | 7 | 7 | 7 | | |
| 9 | 90467–15001 | CLIP | 2 | 2 | 2 | 2 | | |
| 10 | 5JJ–14803–00 | AIR INDUCTION SYSTEM ASSY | 1 | 1 | 1 | 1 | | |
| 11 | 95827–06020 | BOLT, FLANGE | 2 | 2 | 2 | 2 | | |
| 12 | 90387–07391 | COLLAR | 2 | 2 | 2 | 2 | | |
| 13 | 90480–15316 | GROMMET | 2 | 2 | 2 | 2 | | |
| 14 | 5JJ–14867–00 | BRACKET | 1 | 1 | 1 | 1 | | |
| 15 | 91317–06012 | BOLT | 3 | 3 | 3 | 3 | | |
| 16 | 5JJ–14881–00 | HOSE, BEND 1 | 1 | 1 | 1 | 1 | | |
| 17 | 90467–17089 | CLIP | 1 | 1 | 1 | 1 | | |
| 18 | 5JJ–14884–00 | HOSE, BEND 4 | 1 | 1 | 1 | 1 | | |
| 19 | 90467–08092 | CLIP | 2 | 2 | 2 | 2 | | |

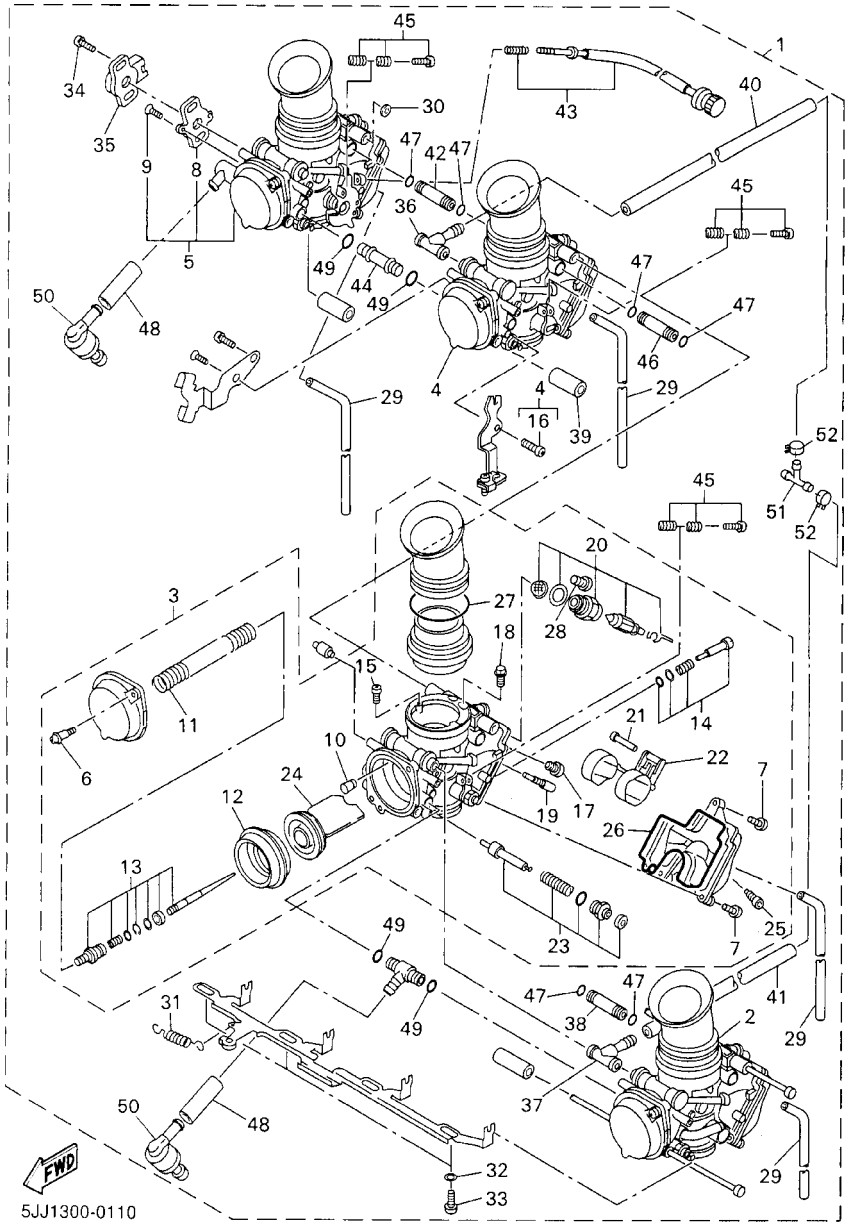


FIG. 11 CARBURETOR

| REF. NO. | PART NO. | DESCRIPTION | 5JJ4 | 5JJ5 | 5JJ6 | 5JJ3 | | REMARKS |
|---|---|---|---|---|---|---|---|---|
| 1 | 5JJ–14900–40 | CARBURETOR ASSY | 1 | | 1 | | | |
| | 5JJ–14900–20 | CARBURETOR ASSY | | 1 | | | | |
| | 5JJ–14900–00 | CARBURETOR ASSY | | | | 1 | | |
| 2 | 5JJ–14901–40 | .CARBURETOR ASSY 1 | 1 | | 1 | | | |
| | 5JJ–14901–20 | .CARBURETOR ASSY 1 | | 1 | | | | |
| | 5JJ–14901–00 | .CARBURETOR ASSY 1 | | | | 1 | | |
| 3 | 5JJ–14902–40 | .CARBURETOR ASSY 2 | 1 | | 1 | | | |
| | 5JJ–14902–20 | .CARBURETOR ASSY 2 | | 1 | | | | |
| | 5JJ–14902–00 | .CARBURETOR ASSY 2 | | | | 1 | | |
| 4 | 5JJ–14903–40 | .CARBURETOR ASSY 3 | 1 | | 1 | | | |
| | 5JJ–14903–20 | .CARBURETOR ASSY 3 | | 1 | | | | |
| | 5JJ–14903–00 | .CARBURETOR ASSY 3 | | | | 1 | | |
| 5 | 5JJ–14904–40 | .CARBURETOR ASSY 4 | 1 | | 1 | | | |
| | 5JJ–14904–20 | .CARBURETOR ASSY 4 | | 1 | | | | |
| | 5JJ–14904–00 | .CARBURETOR ASSY 4 | | | | 1 | | |
| 6 | 4KM–14216–00 | ..SCREW | 2 | 2 | 2 | 2 | | |
| 7 | 98507–05012 | ..SCREW, PAN HEAD | 3 | 3 | 3 | 3 | | |
| 8 | 4KG–14995–00 | ..BRACKET | 1 | 1 | 1 | 1 | | |
| 9 | 98707–04008 | ..SCREW, FLAT HEAD | 2 | 2 | 2 | 2 | | |
| 10 | 4SV–14968–00 | ..CAP | 1 | 1 | 1 | 1 | | |
| 11 | 4SV–14933–00 | ..SPRING, DIAPHRAGM | 1 | 1 | 1 | 1 | | |
| 12 | 4SV–24411–00 | ..DIAPHRAGM | 1 | 1 | 1 | 1 | | |
| 13 | 4XV–1490J–30 | ..NEEDLE SET | 1 | 1 | 1 | | | |
| | 4XV–1490J–00 | ..NEEDLE SET | | | | 1 | | |
| 14 | 4SV–14105–00 | ..PILOT SCREW SET | 1 | 1 | 1 | 1 | | |
| 15 | 4SV–14216–00 | ..SCREW | 2 | 2 | 2 | 2 | | |
| 16 | 98507–05010 | ..SCREW, PAN HEAD | 1 | 1 | 1 | 1 | | |

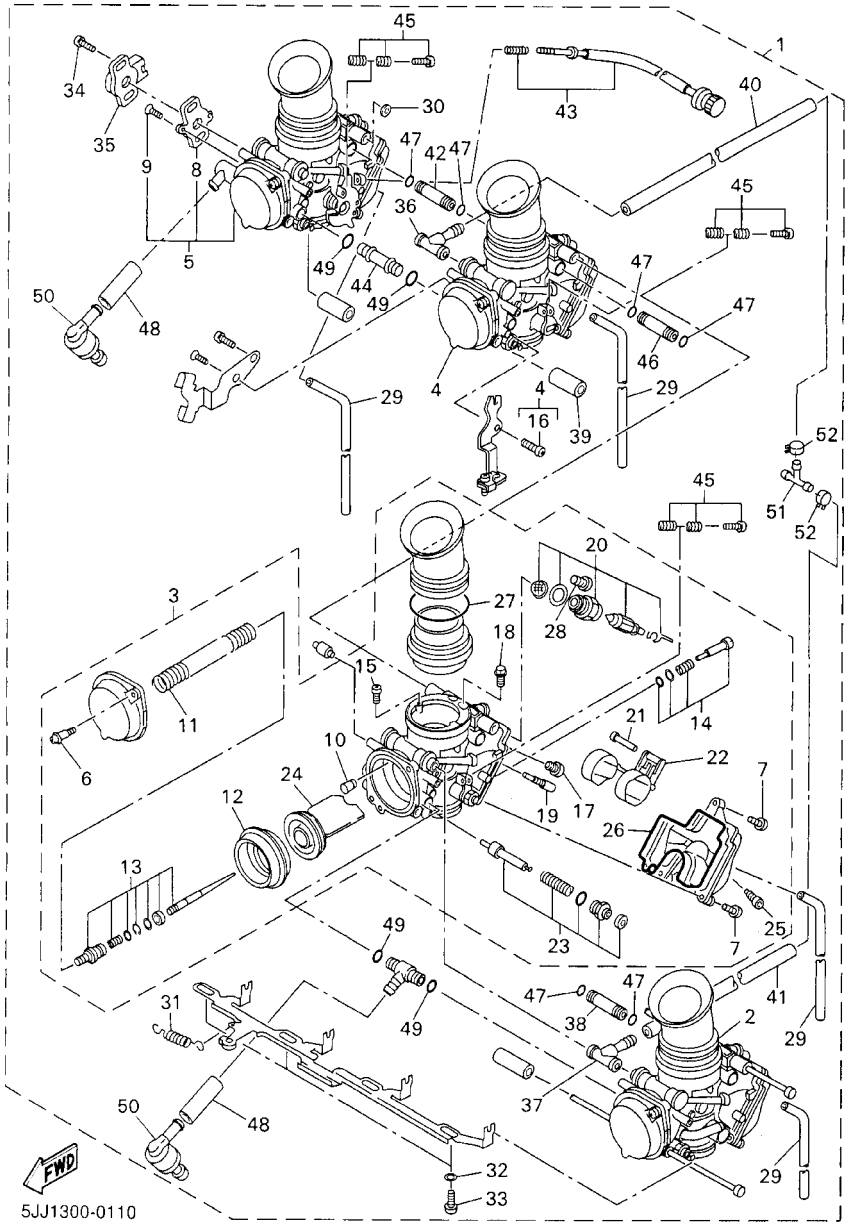


FIG. 11 CARBURETOR

| REF. NO. | PART NO. | DESCRIPTION | 5JJ4 | 5JJ5 | 5JJ6 | 5JJ3 | | REMARKS |
|---|---|---|---|---|---|---|---|---|
| 17 | 3G2–14231–26 | ..JET, MAIN (#130) | 1 | 1 | 1 | 1 | | |
| 18 | 8CC–14232–24 | ..JET, AIR (#120) | 1 | 1 | 1 | 1 | | |
| 19 | 4KM–14142–15 | ..JET, PILOT (# 15) | 1 | 1 | 1 | 1 | | |
| 20 | 4KM–14107–15 | ..NEEDLE VALVE SET | 1 | 1 | 1 | 1 | | |
| 21 | 620–14186–00 | ..PIN, FLOAT | 1 | 1 | 1 | 1 | | |
| 22 | 4SV–14985–00 | ..FLOAT | 1 | 1 | 1 | 1 | | |
| 23 | 4SV–1410A–00 | ..STARTER SET | 1 | 1 | 1 | 1 | | |
| 24 | 4SV–14112–00 | ..VALVE, THROTTLE 1 | 1 | 1 | 1 | 1 | | |
| 25 | 4KP–14191–00 | ..PLUG, DRAIN | 1 | 1 | 1 | 1 | | |
| 26 | 4XV–14562–00 | ..O–RING | 1 | 1 | 1 | 1 | | |
| 27 | 4XV–14275–00 | ..SPRING | 1 | 1 | 1 | 1 | | |
| 28 | 1FN–14565–00 | ..SCREW | 1 | 1 | 1 | 1 | | |
| 29 | 3JE–14197–00 | .PIPE | 4 | 4 | 4 | 4 | | |
| 30 | 28V–14952–00 | .WASHER | 1 | 1 | 1 | 1 | | |
| 31 | 4SV–14935–00 | .SPRING | 1 | 1 | 1 | 1 | | |
| 32 | 4NK–14327–00 | .PACKING | 3 | | 3 | 3 | | |
| | 4NK–14327–00 | .PACKING | | 4 | | | | |
| 33 | 4XV–24453–00 | .SCREW | 3 | | 3 | 3 | | |
| | 4XV–24453–00 | .SCREW | | 4 | | | | |
| 34 | 4KM–24453–00 | .SCREW | 2 | 2 | 2 | 2 | | |
| 35 | 4SV–85885–00 | .THROTTLE POSITION SENSOR ASSY | 1 | 1 | 1 | 1 | | |
| 36 | 4SV–14987–00 | .HOSE | 1 | 1 | 1 | 1 | | |
| 37 | 4XV–90445–00 | .HOSE | 1 | 1 | 1 | 1 | | |
| 38 | 4XV–14149–30 | .PIPE | 1 | 1 | 1 | 1 | | |
| 39 | 4XV–14149–60 | .PIPE | 1 | 1 | 1 | 1 | | |
| 40 | 4YW–14987–00 | .HOSE | 1 | 1 | 1 | 1 | | |
| 41 | 5JJ–14987–00 | .HOSE | 1 | 1 | 1 | 1 | | |

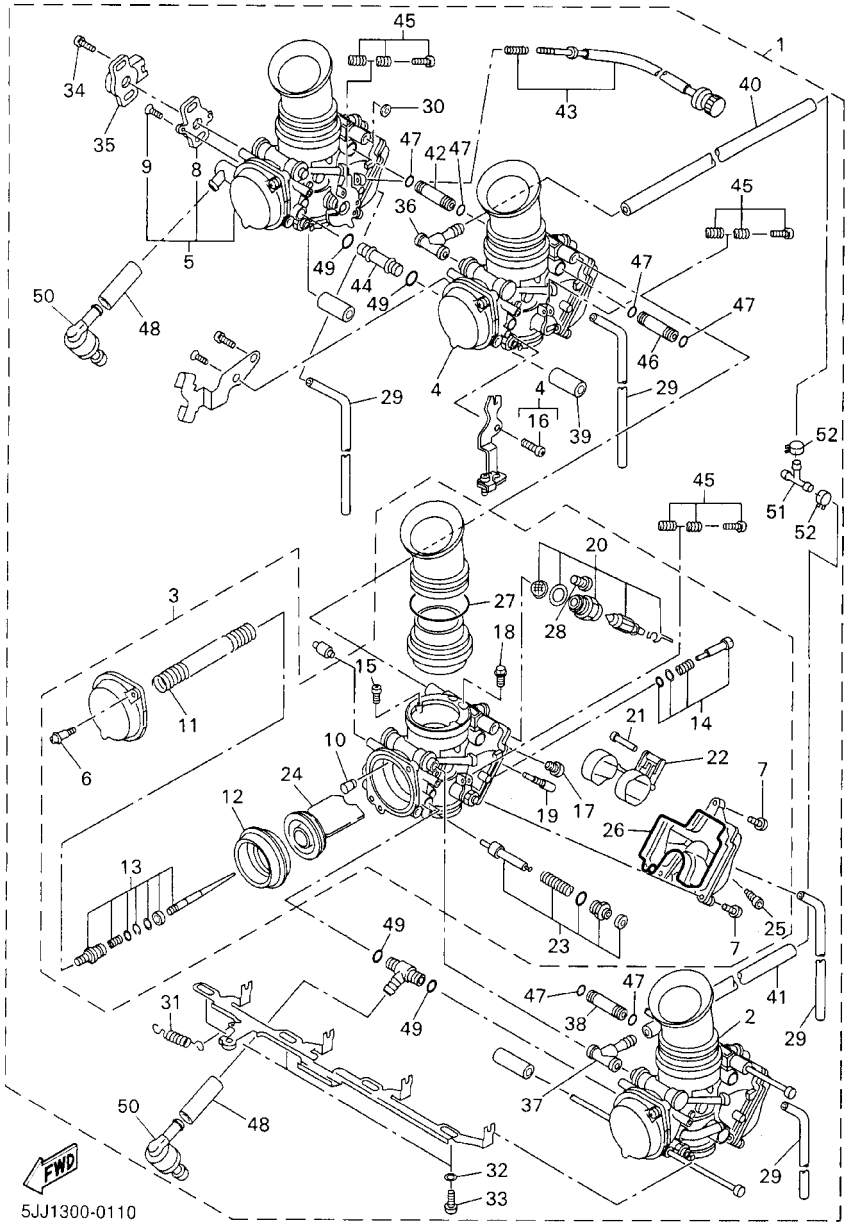


FIG. 11 CARBURETOR

| REF. NO. | PART NO. | DESCRIPTION | 5JJ4 | 5JJ5 | 5JJ6 | 5JJ3 | | REMARKS |
|---|---|---|---|---|---|---|---|---|
| 42 | 4XV–14149–40 | .PIPE | 1 | 1 | 1 | 1 | | |
| 43 | 4XV–14103–00 | .THROTTLE SCREW SET | 1 | 1 | 1 | 1 | | |
| 44 | 4XV–14149–90 | .PIPE | 1 | 1 | 1 | 1 | | |
| 45 | 3EN–1490K–00 | .STOP SCREW SET | 3 | 3 | 3 | 3 | | |
| 46 | 4XV–14149–70 | .PIPE | 1 | 1 | 1 | 1 | | |
| 47 | 36Y–14147–00 | .O–RING | 6 | 6 | 6 | 6 | | |
| 48 | 3LN–14348–00 | .PIPE 1 | 2 | 2 | 2 | 2 | | |
| 49 | 3LN–1416A–00 | .O–RING | 4 | 4 | 4 | 4 | | |
| 50 | 3LN–24515–00 | .NET, FILTER 2 | 2 | 2 | 2 | 2 | | |
| 51 | 90413–10016 | .WAY 3 | 1 | 1 | 1 | 1 | | |
| 52 | 90467–11090 | .CLIP | 2 | 2 | 2 | 2 | | |

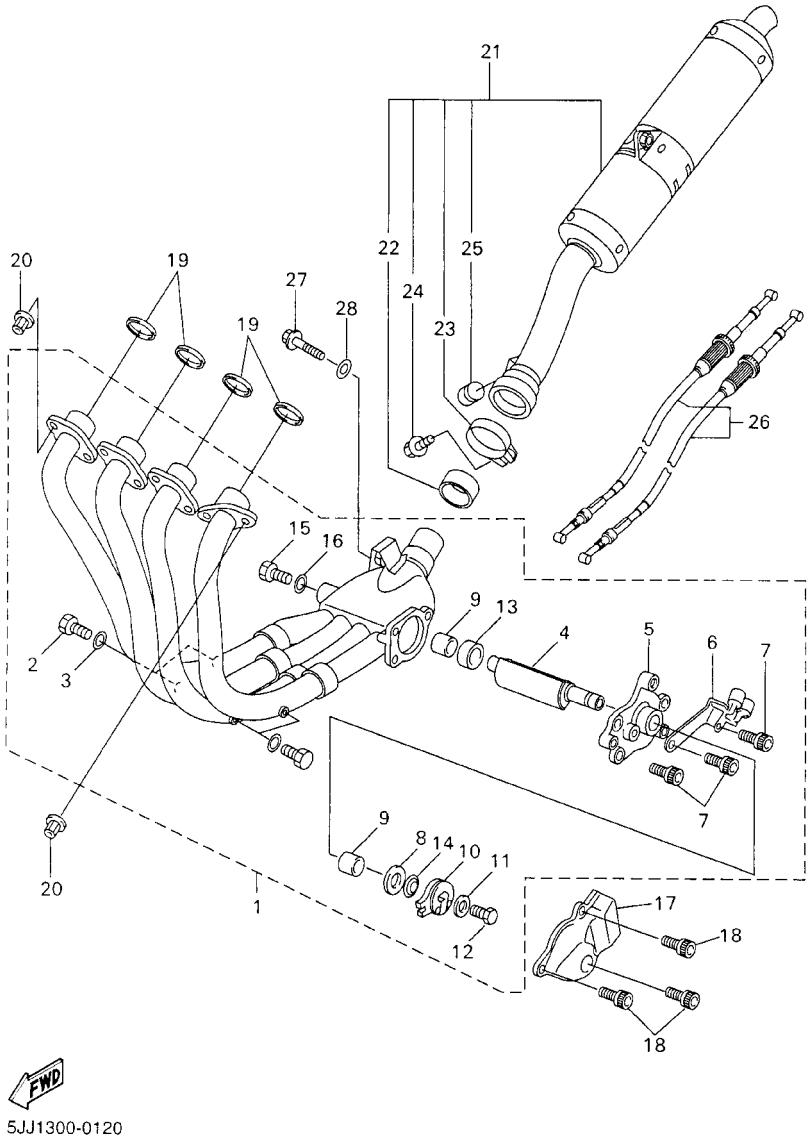


FIG. 12 EXHAUST

| REF. NO. | PART NO. | DESCRIPTION | 5JJ4 | 5JJ5 | 5JJ6 | 5JJ3 | | REMARKS |
|---|---|---|---|---|---|---|---|---|
| 1 | 5JJ–14610–00 | EXHAUST PIPE ASSY 1 | 1 | 1 | 1 | 1 | | |
| 2 | 97080–06008 | .BOLT | 4 | 4 | 4 | 4 | | |
| 3 | 92990–06600 | .WASHER, PLATE | 4 | 4 | 4 | 4 | | |
| 4 | 4SV–14821–00 | .ARM, SHAFT (VALVE) | 1 | 1 | 1 | 1 | | |
| 5 | 5JJ–14811–00 | .HOUSING | 1 | 1 | 1 | 1 | | |
| 6 | 2TK–14867–01 | .BRACKET | 1 | 1 | 1 | 1 | | |
| 7 | 90119–06115 | .BOLT, WITH WASHER | 3 | 3 | 3 | 3 | | |
| 8 | 90201–106M5 | .WASHER, PLATE | 1 | 1 | 1 | 1 | | |
| 9 | 4SV–14638–00 | .COLLAR | 2 | 2 | 2 | 2 | | |
| 10 | 2TK–14865–01 | .PULLEY | 1 | 1 | 1 | 1 | | |
| 11 | 90201–050T4 | .WASHER, PLATE | 1 | 1 | 1 | 1 | | |
| 12 | 97080–05012 | .BOLT | 1 | 1 | 1 | 1 | | |
| 13 | 90387–106U7 | .COLLAR | 1 | 1 | 1 | 1 | | |
| 14 | 3GM–14683–00 | .SPRING, HOOK | 1 | 1 | 1 | 1 | | |
| 15 | 91380–04006 | .BOLT | 2 | 2 | 2 | 2 | | |
| 16 | 92990–04600 | .WASHER, PLATE | 2 | 2 | 2 | 2 | | |
| 17 | 4HD–14826–00 | PROTECTOR, EXHAUST | 1 | 1 | 1 | 1 | | |
| 18 | 90119–06187 | BOLT, WITH WASHER | 3 | 3 | 3 | 3 | | |
| 19 | 4FM–14613–00 | GASKET, EXHAUST PIPE | 4 | 4 | 4 | 4 | | |
| 20 | 90179–08410 | NUT | 8 | 8 | 8 | 8 | | |
| 21 | 5JJ–14710–10 | MUFFLER ASSY 1 | 1 | 1 | 1 | | | |
| | 5JJ–14710–00 | MUFFLER ASSY 1 | | | | 1 | | |
| 22 | 4XV–14714–00 | .GASKET, MUFFLER | 1 | 1 | 1 | 1 | | |
| 23 | 5JJ–14715–00 | .BAND, MUFFLER | 1 | 1 | 1 | 1 | | |
| 24 | 95817–08025 | .BOLT, FLANGE | 1 | 1 | 1 | 1 | | |
| 25 | 4FM–24181–00 | .DAMPER, LOCATING 1 | 1 | 1 | 1 | 1 | | |
| 26 | 4XV–1130E–00 | CABLE PULLEY ASSY | 1 | 1 | 1 | 1 | | |

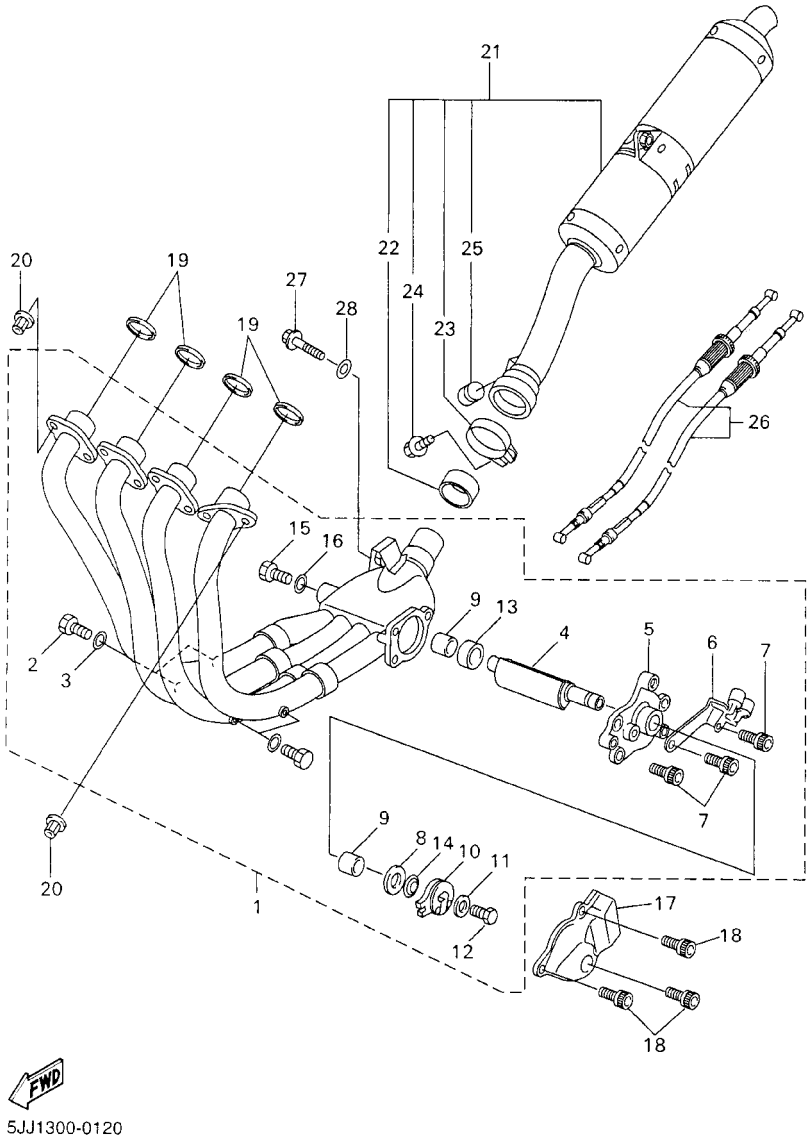


5JJ1300-0120

FIG. 12 EXHAUST

| REF. NO. | PART NO. | DESCRIPTION | 5JJ4 | 5JJ5 | 5JJ6 | 5JJ3 | | REMARKS |
|---|---|---|---|---|---|---|---|---|
| 27 | 95817–08040 | BOLT, FLANGE | 1 | 1 | 1 | 1 | | |
| 28 | 90201–08612 | WASHER, PLATE | 1 | 1 | 1 | 1 | | |

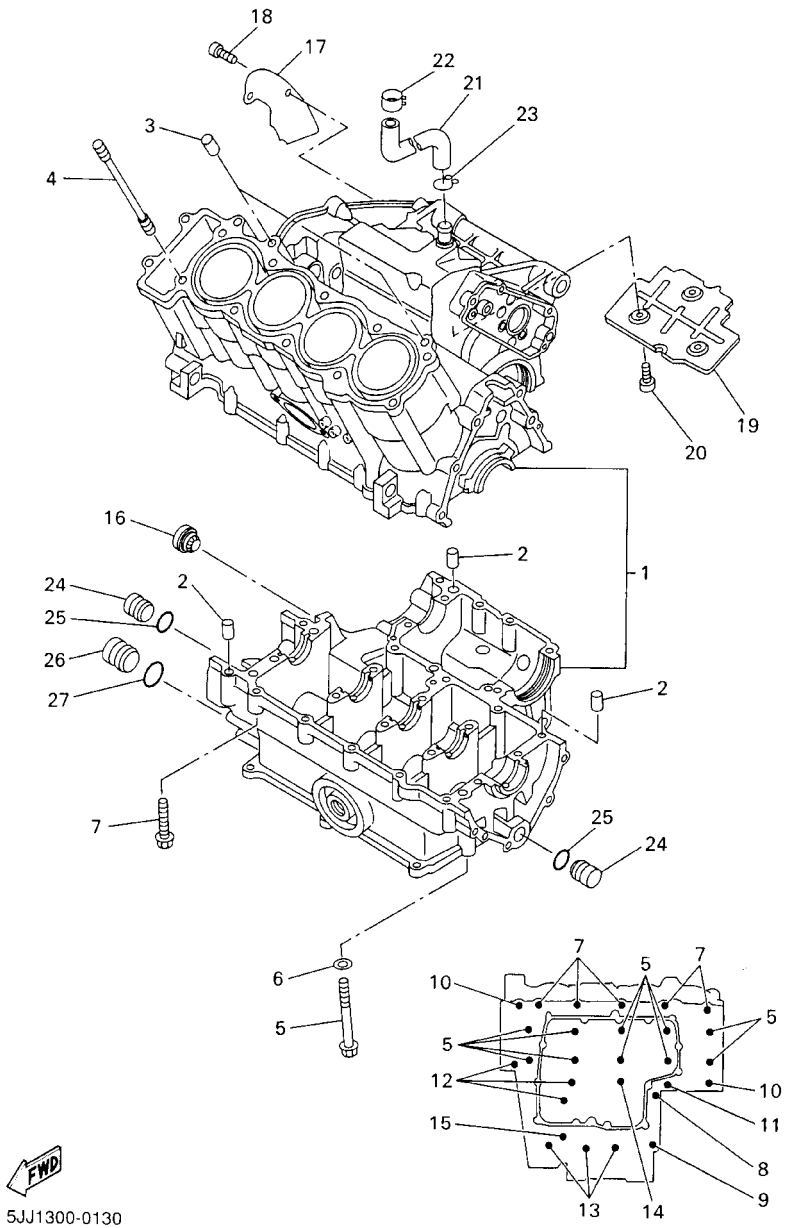


## FIG. 13 CRANKCASE

| REF. NO. | PART NO. | DESCRIPTION | 5JJ4 | 5JJ5 | 5JJ6 | 5JJ3 | | REMARKS |
|---|---|---|---|---|---|---|---|---|
| 1 | 5JJ–15100–00 | CRANKCASE ASSY | 1 | 1 | 1 | 1 | | |
| 2 | 99530–10014 | PIN, DOWEL | 3 | 3 | 3 | 3 | | |
| 3 | 99530–10114 | PIN, DOWEL | 2 | 2 | 2 | 2 | | |
| 4 | 90116–10619 | BOLT, STUD | 10 | 10 | 10 | 10 | | |
| 5 | 90105–093A5 | BOLT, WASHER BASED | 10 | 10 | 10 | 10 | | |
| 6 | 90201–096J9 | WASHER, PLATE | 10 | 10 | 10 | 10 | | |
| 7 | 95817–06055 | BOLT, FLANGE | 5 | 5 | 5 | 5 | | |
| 8 | 90105–08015 | BOLT, WASHER BASED | 1 | 1 | 1 | 1 | | |
| 9 | 95817–08050 | BOLT, FLANGE | 1 | 1 | 1 | 1 | | |
| 10 | 90109–065G3 | BOLT | 2 | 2 | 2 | 2 | | |
| 11 | 95817–06060 | BOLT, FLANGE | 1 | 1 | 1 | 1 | | |
| 12 | 95817–06070 | BOLT, FLANGE | 3 | 3 | 3 | 3 | | |
| 13 | 95817–06045 | BOLT, FLANGE | 3 | 3 | 3 | 3 | | |
| 14 | 95814–06050 | BOLT, FLANGE | 1 | 1 | 1 | 1 | | |
| 15 | 95817–06065 | BOLT, FLANGE | 1 | 1 | 1 | 1 | | |
| 16 | 2H7–15361–00 | GAUGE, LEVEL | 1 | 1 | 1 | 1 | | |
| 17 | 4XV–11165–00 | PLATE, BREATHER | 1 | 1 | 1 | 1 | | |
| 18 | 91317–06012 | BOLT | 2 | 2 | 2 | 2 | | |
| 19 | 4XV–11145–00 | PLATE, BREATHER 2 | 1 | 1 | 1 | 1 | | |
| 20 | 91317–06012 | BOLT | 3 | 3 | 3 | 3 | | |
| 21 | 90445–161K7 | HOSE (L215) | 1 | 1 | 1 | 1 | | |
| 22 | 90468–08104 | CLIP | 1 | 1 | 1 | 1 | | |
| 23 | 90467–14015 | CLIP | 1 | 1 | 1 | 1 | | |
| 24 | 90338–16262 | PLUG | 2 | 2 | 2 | 2 | | |
| 25 | 93210–12790 | O–RING | 2 | 2 | 2 | 2 | | |
| 26 | 90338–20263 | PLUG | 1 | 1 | 1 | 1 | | |
| 27 | 93210–16314 | O–RING | 1 | 1 | 1 | 1 | | |

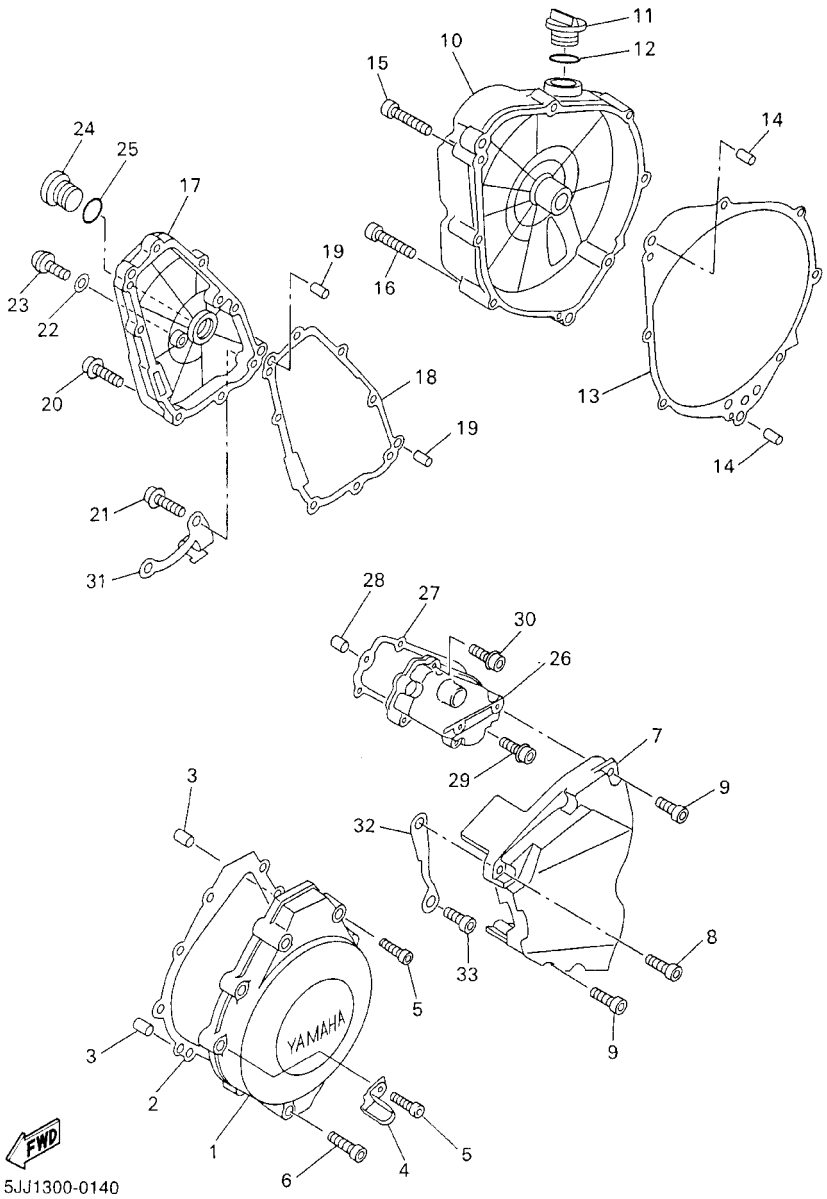


FIG. 14 CRANKCASE COVER 1

| REF. NO. | PART NO. | DESCRIPTION | 5JJ4 | 5JJ5 | 5JJ6 | 5JJ3 | | REMARKS |
|---|---|---|---|---|---|---|---|---|
| 1 | 4XV–15411–00 | COVER, CRANKCASE 1 | 1 | 1 | 1 | 1 | | |
| 2 | 4XV–15451–00 | GASKET, CRANKCASE COVER 1 | 1 | 1 | 1 | 1 | | |
| 3 | 99530–08012 | PIN, DOWEL | 2 | 2 | 2 | 2 | | |
| 4 | 90461–10003 | CLAMP | 1 | 1 | 1 | 1 | | |
| 5 | 91314–06035 | BOLT | 8 | 8 | 8 | 8 | | |
| 6 | 91314–06020 | BOLT | 1 | 1 | 1 | 1 | | |
| 7 | 4XV–15418–00 | COVER, CHAIN CASE | 1 | 1 | 1 | 1 | | |
| 8 | 90110–06224 | BOLT, HEXAGON SOCKET HEAD | 1 | 1 | 1 | 1 | | |
| 9 | 91314–06025 | BOLT | 4 | 4 | 4 | 4 | | |
| 10 | 4XV–15421–00 | COVER, CRANKCASE 2 | 1 | 1 | 1 | 1 | | |
| 11 | 3F9–15362–00 | PLUG, OIL LEVEL | 1 | 1 | 1 | 1 | | |
| 12 | 93210–27194 | O–RING | 1 | 1 | 1 | 1 | | |
| 13 | 4XV–15461–00 | GASKET, CRANKCASE COVER 2 | 1 | 1 | 1 | 1 | | |
| 14 | 90250–08022 | PIN, STRAIGHT | 2 | 2 | 2 | 2 | | |
| 15 | 91314–06040 | BOLT | 5 | 5 | 5 | 5 | | |
| 16 | 91314–06050 | BOLT | 3 | 3 | 3 | 3 | | |
| 17 | 5JJ–15416–00 | COVER, OIL PUMP | 1 | 1 | 1 | 1 | | |
| 18 | 5JJ–15456–00 | GASKET, OIL PUMP COVER 1 | 1 | 1 | 1 | 1 | | |
| 19 | 99530–08012 | PIN, DOWEL | 2 | 2 | 2 | 2 | | |
| 20 | 90109–06014 | BOLT | 4 | 4 | 4 | 4 | | |
| 21 | 90109–06015 | BOLT | 4 | 4 | 4 | 4 | | |
| 22 | 90430–08143 | GASKET | 1 | 1 | 1 | 1 | | |
| 23 | 92014–08016 | BOLT, BUTTON HEAD | 1 | 1 | 1 | 1 | | |
| 24 | 90340–32116 | PLUG, STRAIGHT SCREW | 1 | 1 | 1 | 1 | | |
| 25 | 93210–32172 | O–RING | 1 | 1 | 1 | 1 | | |
| 26 | 5JJ–15425–00 | COVER, GENERATOR 2 | 1 | 1 | 1 | 1 | | |
| 27 | 5JJ–15463–00 | GASKET, CARBURETOR COVER 2 | 1 | 1 | 1 | 1 | | |

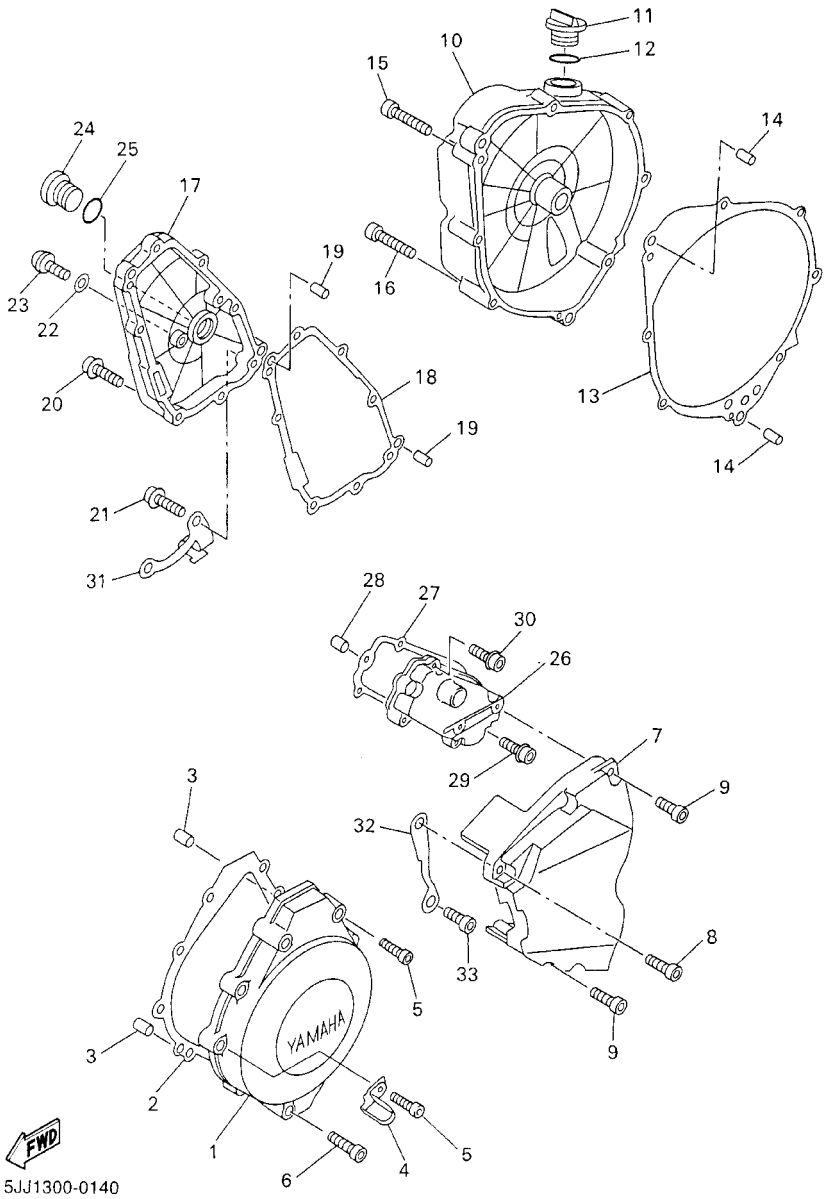


FIG. 14 CRANKCASE COVER 1

| REF. NO. | PART NO. | DESCRIPTION | 5JJ4 | 5JJ5 | 5JJ6 | 5JJ3 | | REMARKS |
|---|---|---|---|---|---|---|---|---|
| 28 | 99530–08012 | PIN, DOWEL | 2 | 2 | 2 | 2 | | |
| 29 | 90109–06014 | BOLT | 2 | 2 | 2 | 2 | | |
| 30 | 90109–06015 | BOLT | 3 | 3 | 3 | 3 | | |
| 31 | 4XV–15441–00 | HOLDER, CLUTCH CABLE | 1 | 1 | 1 | 1 | | |
| 32 | 4XV–15113–00 | PLATE | 1 | 1 | 1 | 1 | | |
| 33 | 90110–06136 | BOLT, HEXAGON SOCKET HEAD | 1 | 1 | 1 | 1 | | |

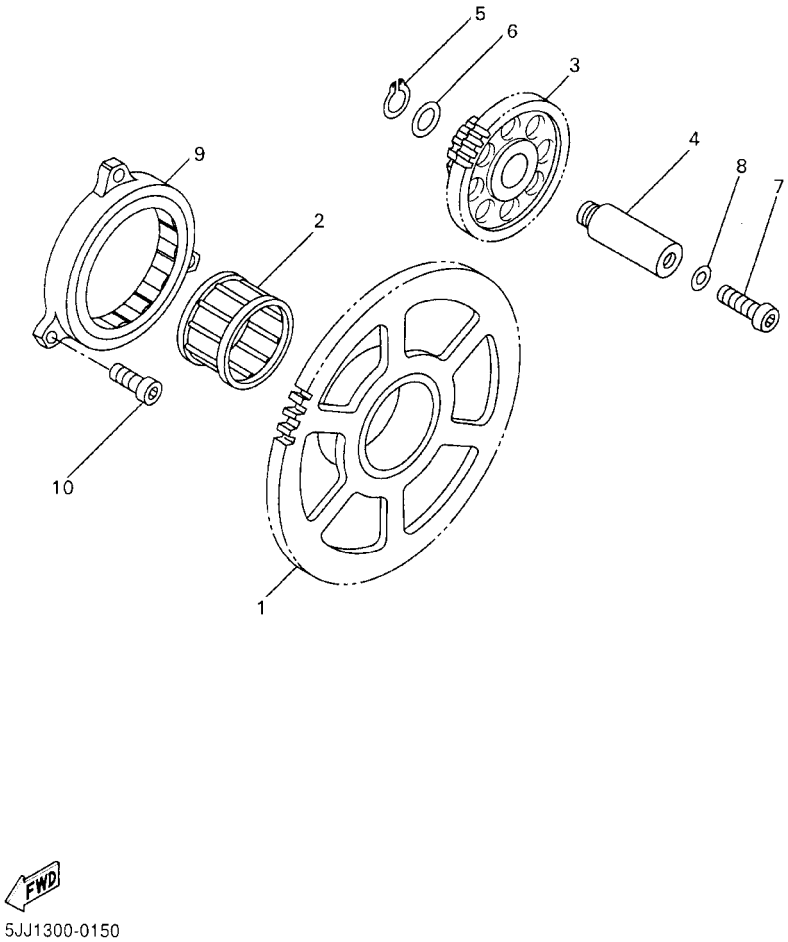


FIG. 15 STARTER

| REF. NO. | PART NO. | DESCRIPTION | 5JJ4 | 5JJ5 | 5JJ6 | 5JJ3 | | REMARKS |
|---|---|---|---|---|---|---|---|---|
| 1 | 5JJ–15515–00 | GEAR 3 | 1 | 1 | 1 | 1 | | |
| 2 | 93310–338S6 | BEARING | 1 | 1 | 1 | 1 | | |
| 3 | 5JJ–15517–00 | GEAR, IDLER 2 | 1 | 1 | 1 | 1 | | |
| 4 | 4XV–15521–00 | SHAFT 1 | 1 | 1 | 1 | 1 | | |
| 5 | 93410–08072 | CIRCLIP | 1 | 1 | 1 | 1 | | |
| 6 | 90201–08089 | WASHER, PLATE | 1 | 1 | 1 | 1 | | |
| 7 | 92017–06014 | BOLT, BUTTON HEAD | 1 | 1 | 1 | 1 | | |
| 8 | 90430–06014 | GASKET | 1 | 1 | 1 | 1 | | |
| 9 | 4XV–15570–00 | STARTER CLUTCH ASSY | 1 | 1 | 1 | 1 | | |
| 10 | 91317–06010 | BOLT | 3 | 3 | 3 | 3 | | |

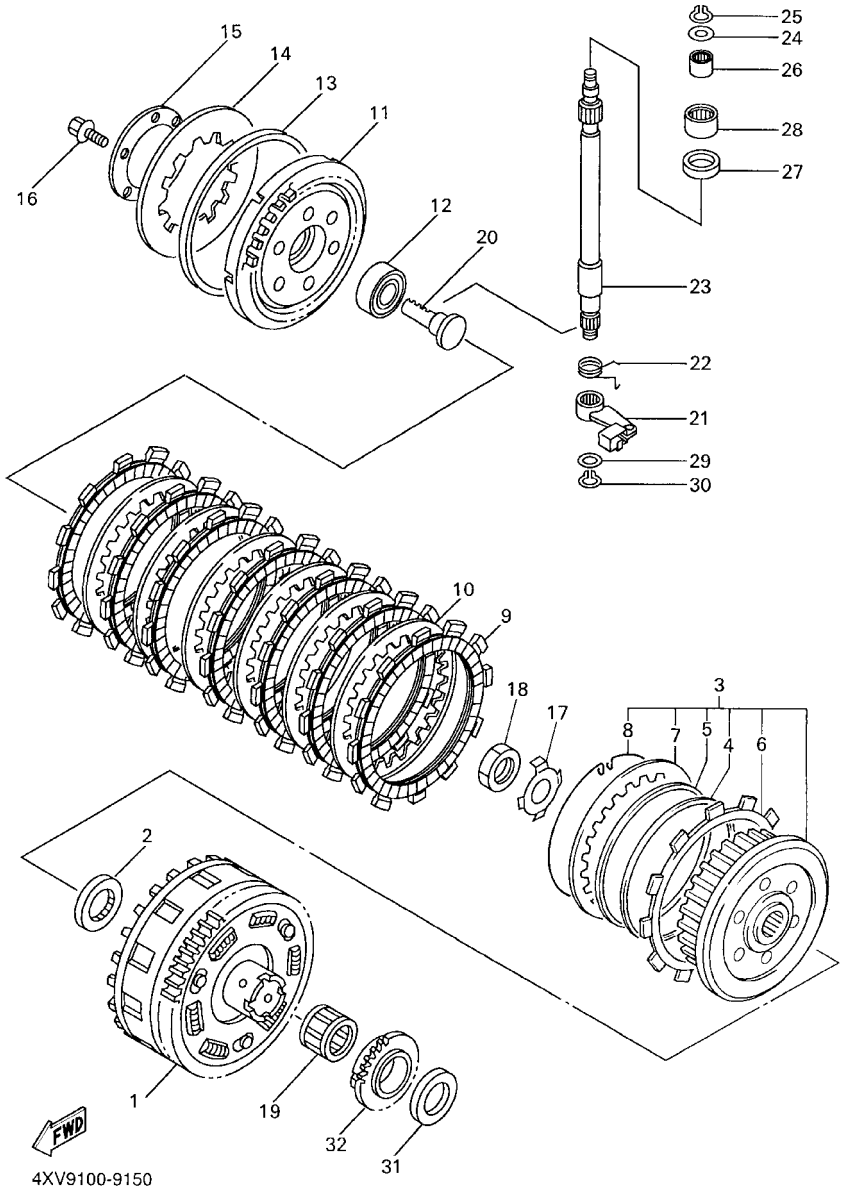


FIG. 16 CLUTCH

| REF. NO. | PART NO. | DESCRIPTION | 5JJ4 | 5JJ5 | 5JJ6 | 5JJ3 | | REMARKS |
|---|---|---|---|---|---|---|---|---|
| 1 | 4XV–16150–02 | PRIMARY DRIVEN GEAR COMP. | 1 | 1 | 1 | 1 | | |
| 2 | 26H–16154–00 | PLATE, THRUST 1 | 1 | 1 | 1 | 1 | | |
| 3 | 4XV–16370–00 | CLUTCH BOSS ASSY | 1 | 1 | 1 | 1 | | |
| 4 | 4XV–16384–00 | .PLATE, SEAT | 1 | 1 | 1 | 1 | | |
| 5 | 36Y–16383–00 | .SPRING, CLUTCH BOSS | 1 | 1 | 1 | 1 | | |
| 6 | 4XV–16331–00 | .PLATE, FRICTION 2 | 1 | 1 | 1 | 1 | | |
| 7 | 2H7–16325–00 | .PLATE, CLUTCH 2 | 1 | 1 | 1 | 1 | | |
| 8 | 2H7–16385–00 | .RING, CLUTCH BOSS | 1 | 1 | 1 | 1 | | |
| 9 | 341–16321–13 | PLATE, FRICTION | 7 | 7 | 7 | 7 | | |
| 10 | 2H7–16325–00 | PLATE, CLUTCH 2 | 6 | 6 | 6 | 6 | | |
| 11 | 4XV–16351–00 | PLATE, PRESSURE 1 | 1 | 1 | 1 | 1 | | |
| 12 | 93306–00304 | BEARING (B6003C4) | 1 | 1 | 1 | 1 | | |
| 13 | 36Y–16335–00 | HOUSING, SPRING | 1 | 1 | 1 | 1 | | |
| 14 | 36Y–16334–00 | SPRING, CLUTCH 2 | 1 | 1 | 1 | 1 | | |
| 15 | 1TX–16352–00 | PLATE, PRESSURE 2 | 1 | 1 | 1 | 1 | | |
| 16 | 95817–06025 | BOLT, FLANGE | 6 | 6 | 6 | 6 | | |
| 17 | 90215–25218 | WASHER, LOCK | 1 | 1 | 1 | 1 | | |
| 18 | 90170–20323 | NUT | 1 | 1 | 1 | 1 | | |
| 19 | 93310–228S5 | BEARING | 1 | 1 | 1 | 1 | | |
| 20 | 4XV–16356–01 | ROD, PUSH 1 | 1 | 1 | 1 | 1 | | |
| *21 | 4XV–16340–01 | PUSH LEVER ASSY | 1 | 1 | 1 | 1 | | |
| 22 | 90508–164B2 | SPRING, TORSION | 1 | 1 | 1 | 1 | | |
| 23 | 4XV–16382–00 | AXLE, PUSH LEVER | 1 | 1 | 1 | 1 | | |
| 24 | 92907–08600 | WASHER, PLATE | 1 | 1 | 1 | 1 | | |
| 25 | 99001–07600 | CIRCLIP | 1 | 1 | 1 | 1 | | |
| 26 | 93317–11020 | BEARING | 1 | 1 | 1 | 1 | | |
| 27 | 93102–15212 | OIL SEAL | 1 | 1 | 1 | 1 | | |

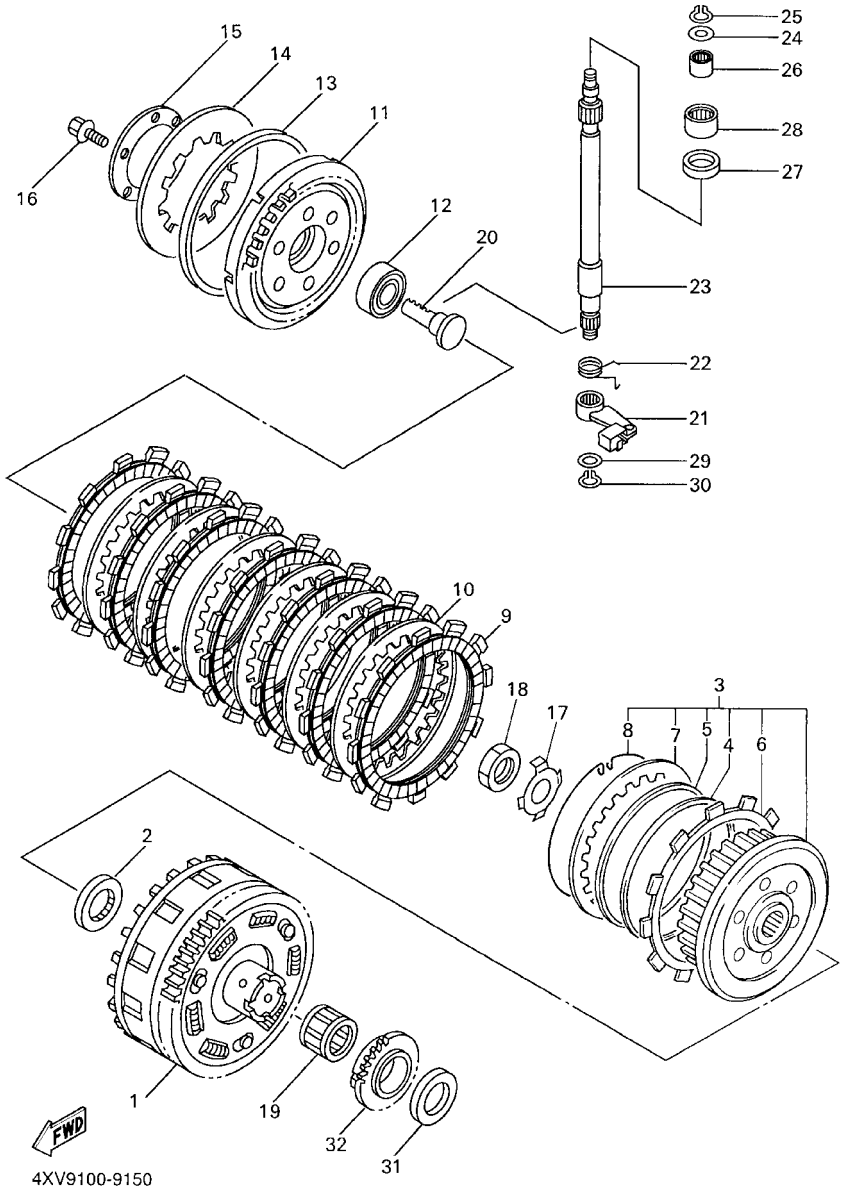


FIG. 16 CLUTCH

| REF. NO. | PART NO. | DESCRIPTION | 5JJ4 | 5JJ5 | 5JJ6 | 5JJ3 | | REMARKS |
|---|---|---|---|---|---|---|---|---|
| 28 | 93315–31502 | BEARING | 1 | 1 | 1 | 1 | | |
| 29 | 90201–10614 | WASHER, PLATE | 1 | 1 | 1 | 1 | | |
| 30 | 99009–10400 | CIRCLIP | 1 | 1 | 1 | 1 | | |
| 31 | 4XV–16154–00 | PLATE, THRUST 1 | 1 | 1 | 1 | 1 | | |
| 32 | 4XV–13354–00 | SPROCKET, DRIVE | 1 | 1 | 1 | 1 | | |

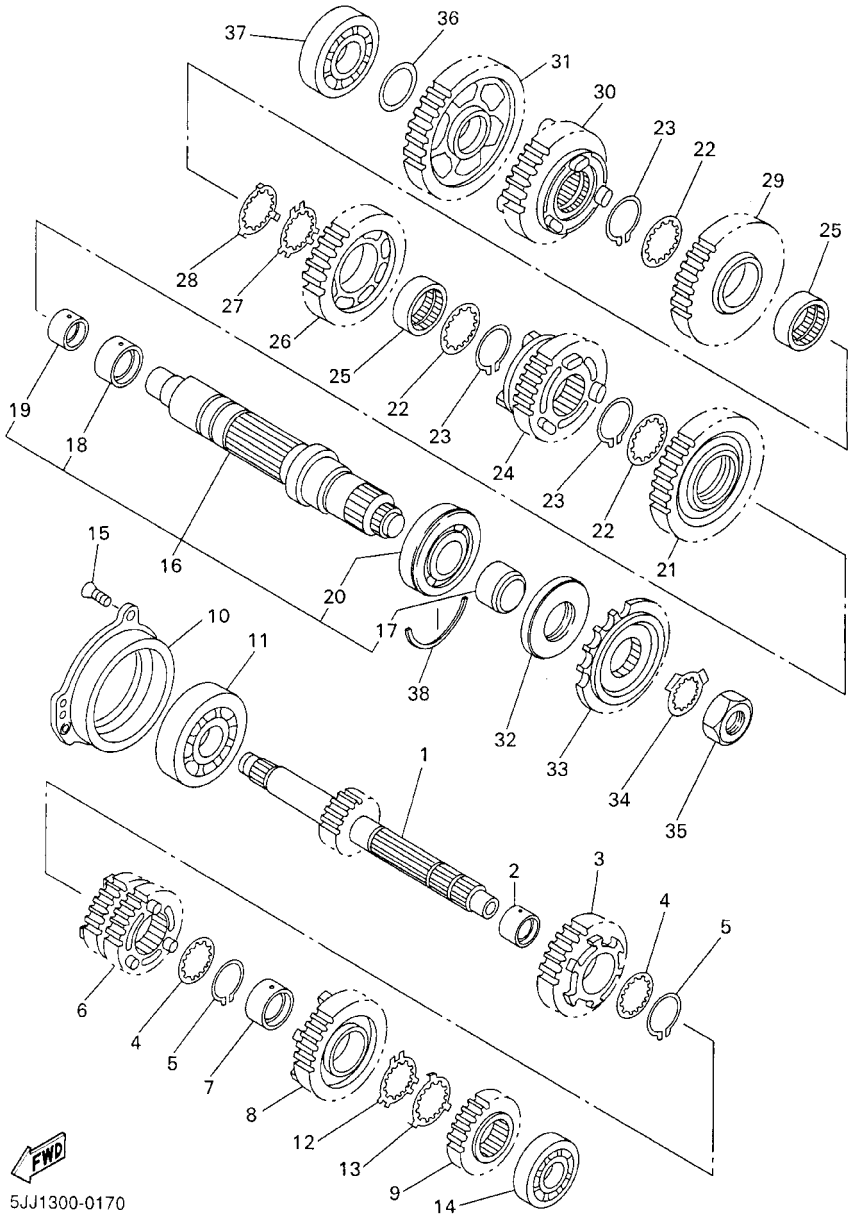


FIG. 17 TRANSMISSION

| REF. NO. | PART NO. | DESCRIPTION | 5JJ4 | 5JJ5 | 5JJ6 | 5JJ3 | | REMARKS |
|---|---|---|---|---|---|---|---|---|
| 1 | 5JJ–17411–00 | AXLE, MAIN | 1 | 1 | 1 | 1 | | |
| 2 | 90387–2811B | COLLAR | 1 | 1 | 1 | 1 | | |
| 3 | 5JJ–17151–00 | GEAR, 5TH PINION | 1 | 1 | 1 | 1 | | |
| 4 | 90209–25342 | WASHER | 2 | 2 | 2 | 2 | | |
| 5 | 93440–28062 | CIRCLIP | 2 | 2 | 2 | 2 | | |
| 6 | 5JJ–17131–00 | GEAR, 3RD PINION | 1 | 1 | 1 | 1 | | |
| 7 | 90387–2810U | COLLAR | 1 | 1 | 1 | 1 | | |
| 8 | 5JJ–17161–00 | GEAR, 6TH PINION | 1 | 1 | 1 | 1 | | |
| 9 | 5JJ–17121–00 | GEAR, 2ND PINION | 1 | 1 | 1 | 1 | | |
| 10 | 5JJ–15163–00 | HOUSING, BEARING 1 | 1 | 1 | 1 | 1 | | |
| 11 | 93306–37807 | BEARING | 1 | 1 | 1 | 1 | | |
| 12 | 90209–25349 | WASHER | 1 | 1 | 1 | 1 | | |
| 13 | 90209–25350 | WASHER | 1 | 1 | 1 | 1 | | |
| 14 | 93306–27208 | BEARING | 1 | 1 | 1 | 1 | | |
| 15 | 90149–06286 | SCREW | 3 | 3 | 3 | 3 | | |
| 16 | 5JJ–17402–00 | DRIVE AXLE ASSY | 1 | 1 | 1 | 1 | | Go to P/N: PE0-MC-040134 |
| 17 | 5JJ–17158–00 | .COLLAR 1 | 1 | 1 | 1 | 1 | | Go to P/N: PE0-MC-040134 |
| 18 | 90387–3311C | .COLLAR | 1 | 1 | 1 | 1 | | Go to P/N: PE0-MC-040134 |
| 19 | 90387–2511A | .COLLAR | 1 | 1 | 1 | 1 | | Go to P/N: PE0-MC-040134 |
| 20 | 93306–20705 | .BEARING (B6207N) | 1 | 1 | 1 | 1 | | Go to P/N: PE0-MC-040134 |
| 21 | 5JJ–17221–00 | GEAR, 2ND WHEEL | 1 | 1 | 1 | 1 | | |
| 22 | 90209–30344 | WASHER | 3 | 3 | 3 | 3 | | |
| 23 | 93440–32063 | CIRCLIP | 3 | 3 | 3 | 3 | | |
| 24 | 5JJ–17261–00 | GEAR, 6TH WHEEL | 1 | 1 | 1 | 1 | | |
| 25 | 90387–3310V | COLLAR | 2 | 2 | 2 | 2 | | |
| 26 | 5JJ–17241–00 | GEAR, 4TH WHEEL | 1 | 1 | 1 | 1 | | |
| 27 | 90209–30345 | WASHER | 1 | 1 | 1 | 1 | | |

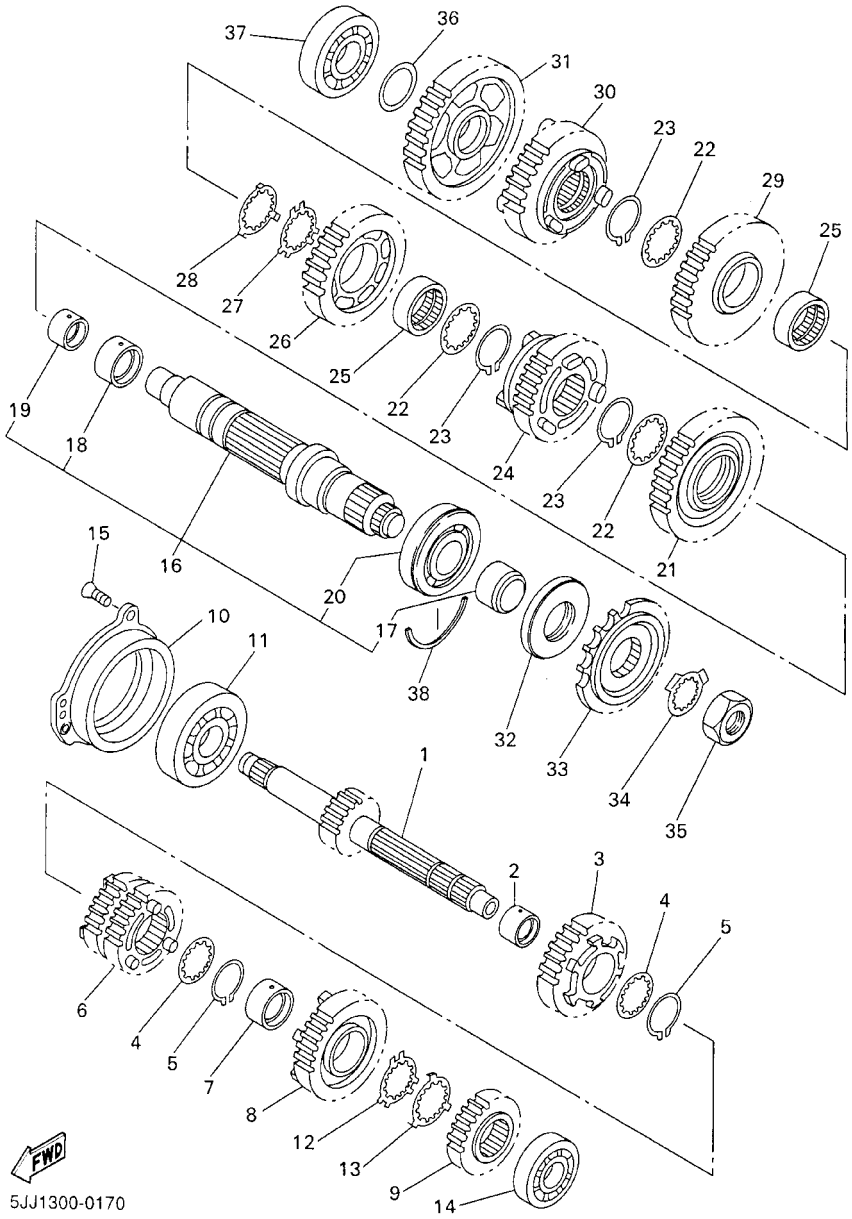


FIG. 17 TRANSMISSION

| REF. NO. | PART NO. | DESCRIPTION | 5JJ4 | 5JJ5 | 5JJ6 | 5JJ3 | | REMARKS |
|---|---|---|---|---|---|---|---|---|
| 28 | 90209–30343 | WASHER | 1 | 1 | 1 | 1 | | |
| 29 | 5JJ–17231–00 | GEAR, 3RD WHEEL | 1 | 1 | 1 | 1 | | |
| 30 | 5JJ–17251–00 | GEAR, 5TH WHEEL | 1 | 1 | 1 | 1 | | |
| 31 | 5JJ–17211–00 | GEAR, 1ST WHEEL | 1 | 1 | 1 | 1 | | |
| 32 | 93102–45465 | OIL SEAL | 1 | 1 | 1 | 1 | | |
| 33 | 4XV–17460–00 | SPROCKET, DRIVE | 1 | 1 | 1 | 1 | | |
| 34 | 90215–30233 | WASHER, LOCK | 1 | 1 | 1 | 1 | | |
| 35 | 90179–22063 | NUT | 1 | 1 | 1 | 1 | | |
| 36 | 90201–224L4 | WASHER, PLATE | 1 | 1 | 1 | 1 | | |
| 37 | 93306–37209 | BEARING | 1 | 1 | 1 | 1 | | |
| 38 | 93440–72049 | CIRCLIP | 1 | 1 | 1 | 1 | | |

# PARTS NEWS

YAMAHA
YAMAHA MOTOR CO., LTD.
2500 SHINGAI IWATA SHIZUOKA JAPAN

News No M/C-04134

Date: October,19, 2004

Signature: K.Otsuka

| | |
|---|---|
| Model | YZF-R1 (See the "List of Models and CATALOGUE No's ."of the next page.) |
| Subject | PARTS CATALOGUE CORRECTIONS |
| CATALOGUE NO. | See the "List of Models and CATALOGUE No's ."of the next page. |

Please make the following corrections to your parts catalogue.

1. LIST CORRECTION

FIG17 TRANSMISSION

| Ref.No. | OLD P/No. | NEW P/No. | PARTS NAME | Q'TY | REMARKS |
|---|---|---|---|---|---|
| 17-16 | 5JJ-17402-00 | ← | DRIVE AXLE ASSY | 1 | |
| 17-17 | 5JJ-17158-00 | ← | . COLLAR 1 | 1 | |
| 17-18 | 90387-3311C | ← | . COLLAR | 1 | |
| 17-19 | 90387-2511A | ← | . COLLAR | 1 | |
| 17-20 | 93306-20705 | ← | . BEARING | 1 | |

| Ref.No. | OLD P/No. | NEW P/No. | PARTS NAME | Q'TY | REMARKS |
|---|---|---|---|---|---|
| 17-16 | 5JJ-17402-00 | ← | DRIVE AXLE ASSY | 1 | |
| 17-17 | 5JJ-17158-00 | ← | . COLLAR 1 | 1 | |
| 17-18 | 93306-20705 | ← | . BEARING | 1 | |
| 17-19 | 90387-3311C | ← | COLLAR | 1 | No longer contained in Ref No.16. |
| 17-20 | 90387-2511A | ← | COLLAR | 1 | No longer contained in Ref No.16. |

2. ILLUSTRATION CORRECTION

Illustration should be read as follows.

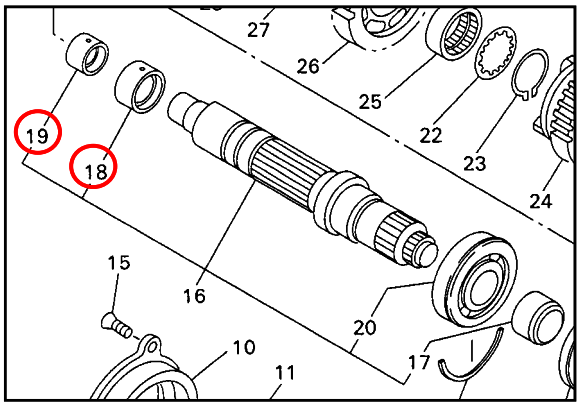


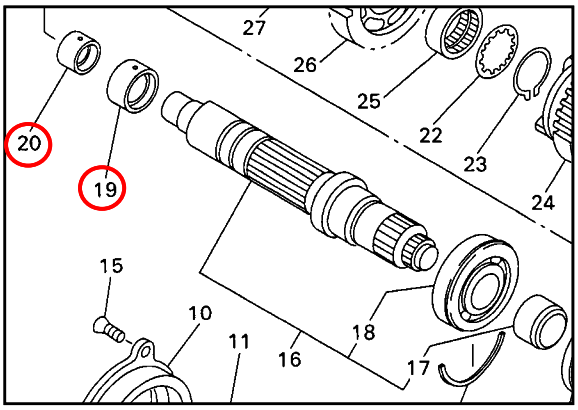


| Parts Manager Check | Service Manager Check | Parts Manager File |
|---|---|---|

YAMAHA MOTOR CO.,LTD
2500 Shingai Iwata Shizuoka 438-8501.Japan
CUSTOMER & MARKET INFORMATION DEPT.

YAMAHA GENUINE Parts & Accessories

# PARTS NEWS

YAMAHA
YAMAHA MOTOR CO., LTD.
2500 SHINGAI IWATA SHIZUOKA JAPAN

News No M/C-04134

Date: October,19, 2004

Signature: K.Otsuka

| | |
|---|---|
| Model | YZF-R1 (See the "List of Models and CATALOGUE No's below.") |
| Subject | PARTS CATALOGUE CORRECTIONS |
| CATALOGUE NO. | See the "List of Models and CATALOGUE No's below." |

List of Models and CATALOGUE No's.
The applicable MODELS, MODEL CODES, and CATALOGUE No's. are as follows.

| MODEL (MODEL CODE) | CATALOGUE No. | MODEL (MODEL CODE) | CATALOGUE No. |
|---|---|---|---|
| YZF-R1(5JJ1) | 105JJ-300E2<br>205JJ-300E2 | YZF-R1(5PW1) | 1A5PW-300E4<br>2A5PW-300E4 |
| YZF-R1(5JJ1,5JJ7) | 105JJ-332G2<br>205JJ-332G2 | YZF-R1(5PW1) | 1A5PW-332G4<br>2A5PW-332G4 |
| YZF-R1(5JJ2) | 105JJ-351F2<br>205JJ-351F2 | YZF-R1(5PW2) | 1A5PW-351F4<br>2A5PW-351F4 |
| YZF-R1(5JJ1) | 105JJ-352S2<br>205JJ-352S2 | YZF-R1(5PW1) | 1A5PW-352S4<br>2A5PW-352S4 |
| YZF-R1M/YZF-R1MC<br>(5JJ3,5JJ4,5JJ6/5JJ5) | 105JJ-100E2<br>205JJ-100E2 | YZF-R1P/YZF-R1PC<br>(5PW3,5PW4,5PW6/5PW5) | 1A5PW-100E3<br>2A5PW-100E3 |
| YZF-R1(5JJ8) | 115JJ-300E1<br>215JJ-300E1 | YZF-R1(5PW7) | 1B5PW-300E1<br>2B5PW-300E1 |
| YZF-R1(5JJ8,5JJA) | 115JJ-332G1<br>215JJ-332G1 | YZF-R1(5PW7) | 1B5PW-332G1<br>2B5PW-332G1 |
| YZF-R1(5JJ9) | 115JJ-351F1<br>215JJ-351F1 | YZF-R1(5PW8) | 1B5PW-351F1<br>2B5PW-351F1 |
| YZF-R1(5JJ8) | 115JJ-352S1<br>215JJ-352S1 | YZF-R1(5PW7) | 1B5PW-352S1<br>2B5PW-352S1 |
| YZF-R1N/YZF-R1NC<br>(5JJB,5JJC,5JJE/5JJD) | 115JJ-100E1<br>215JJ-100E1 | YZF-R1R/YZF-R1RC<br>(5PW9,5PWA,5PWC/5PWB) | 1B5PW-100E2<br>2B5PW-100E2 |
| YZF-R1SN/YZF-R1SNC<br>(5JJF,5JJH/5JJG) | 115JJ-100EA<br>215JJ-100EA | YZF-R1R/YZF-R1RC<br>(5PWD,5PWF,5PWG/5PWE) | 1B5PW-100EA<br>2B5PW-100EA |
| | | YZF-R1R/YZF-R1RC<br>(5PWA,5PWD/5PWB,5PWE) | 1B5PW-110E1 |

*;These changes are applied from initial production.

Thank you very much for your cooperation.

| Parts Manager Check | Service Manager Check | Parts Manager File |
|---|---|---|

YAMAHA MOTOR CO.,LTD
2500 Shingai Iwata Shizuoka 438-8501.Japan
CUSTOMER & MARKET INFORMATION DEPT.

YAMAHA GENUINE Parts & Accessories

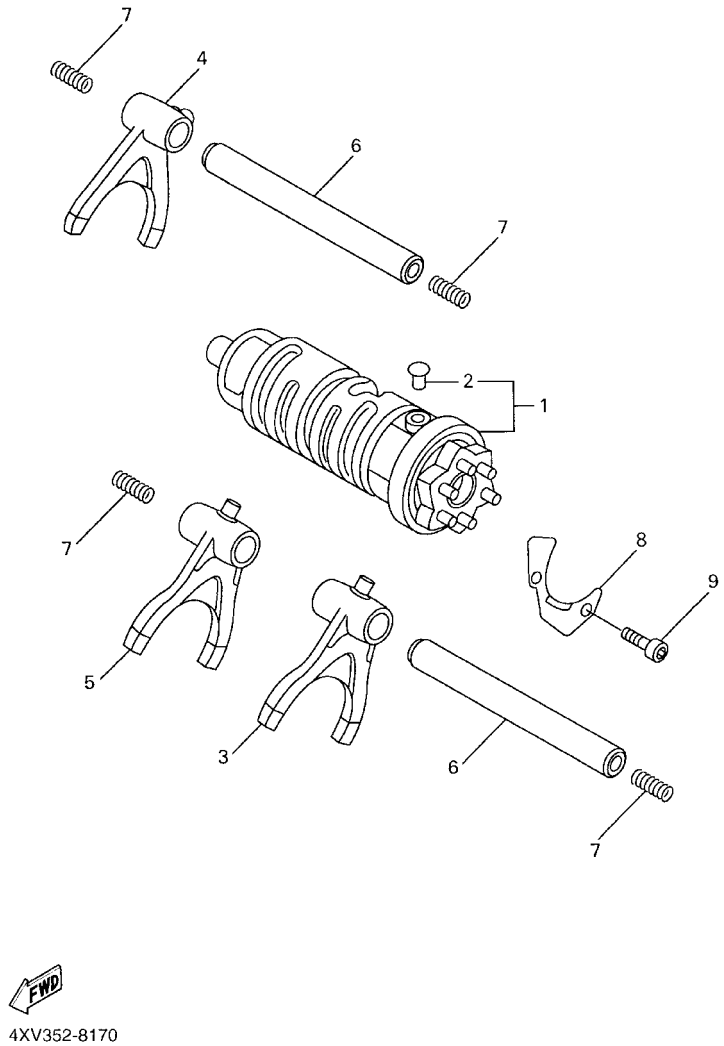


FIG. 18 SHIFT CAM. FORK

| REF. NO. | PART NO. | DESCRIPTION | 5JJ4 | 5JJ5 | 5JJ6 | 5JJ3 | | REMARKS |
|---|---|---|---|---|---|---|---|---|
| 1 | 4XV–18540–00 | SHIFT CAM ASSY | 1 | 1 | 1 | 1 | | |
| 2 | 136–18542–00 | .POINT, NEUTRAL | 1 | 1 | 1 | 1 | | |
| 3 | 4XV–18511–00 | FORK, SHIFT 1 | 1 | 1 | 1 | 1 | | |
| 4 | 5JJ–18512–00 | FORK, SHIFT 2 | 1 | 1 | 1 | 1 | | |
| 5 | 4XV–18513–00 | FORK, SHIFT 3 | 1 | 1 | 1 | 1 | | |
| 6 | 4XV–18531–00 | BAR, SHIFT FORK GUIDE 1 | 2 | 2 | 2 | 2 | | |
| 7 | 90501–064L1 | SPRING, COMPRESSION | 4 | 4 | 4 | 4 | | |
| 8 | 4XV–18536–00 | STOPPER, SHIFT BAR | 1 | 1 | 1 | 1 | | |
| 9 | 90110–06226 | BOLT, HEXAGON SOCKET HEAD | 2 | 2 | 2 | 2 | | |

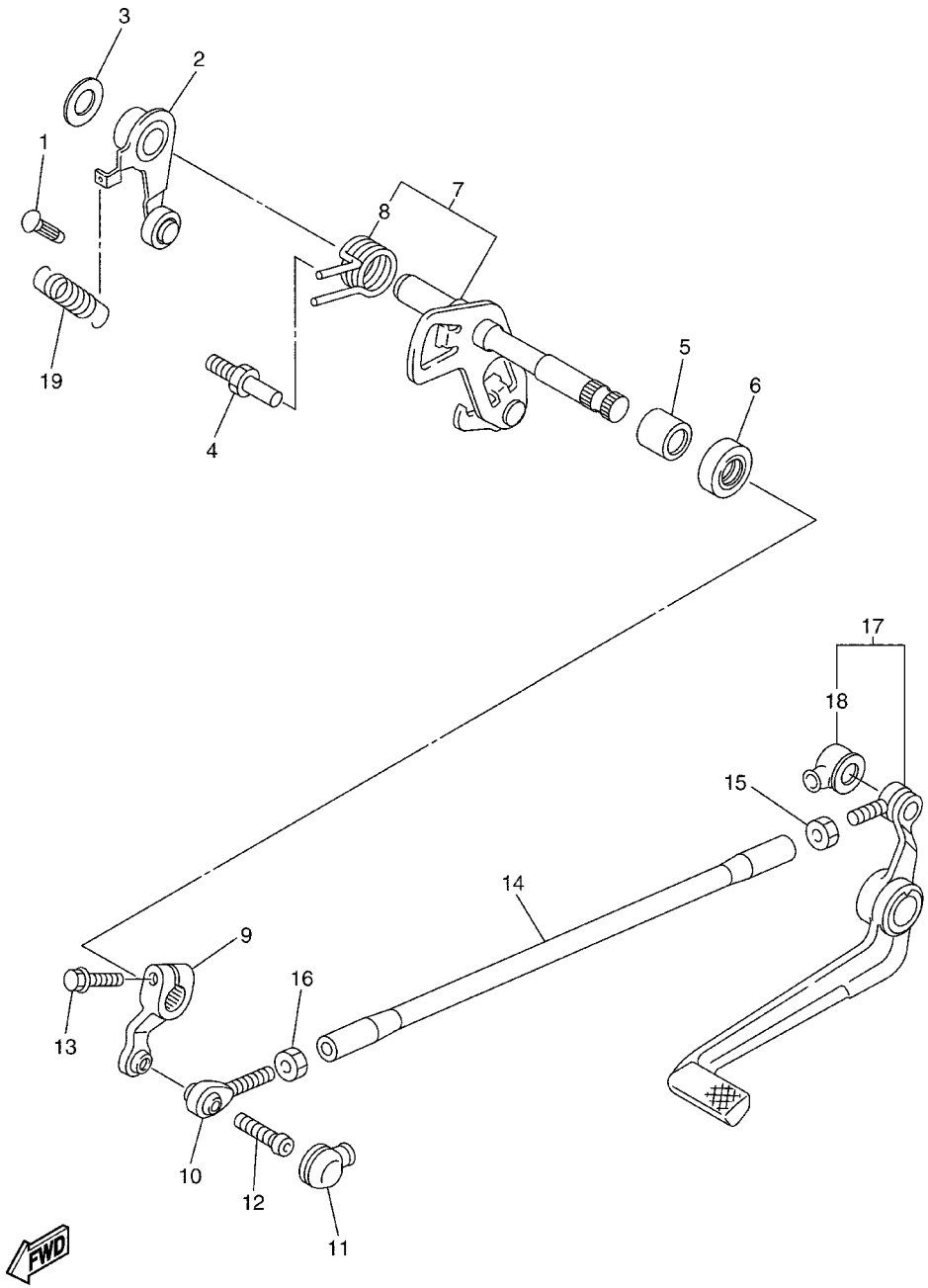


5JJ1300-0190

FIG. 19 SHIFT SHAFT

| REF. NO. | PART NO. | DESCRIPTION | 5JJ4 | 5JJ5 | 5JJ6 | 5JJ3 | | REMARKS |
|---|---|---|---|---|---|---|---|---|
| 1 | 132–16346–00 | HOOK, SPRING | 1 | 1 | 1 | 1 | | |
| 2 | 5JJ–18140–00 | STOPPER LEVER ASSY | 1 | 1 | 1 | 1 | | |
| 3 | 90201–120K4 | WASHER, PLATE | 1 | 1 | 1 | 1 | | |
| 4 | 4XV–18127–00 | STOPPER, SCREW | 1 | 1 | 1 | 1 | | |
| 5 | 93315–11206 | BEARING | 1 | 1 | 1 | 1 | | |
| 6 | 93101–12004 | OIL SEAL | 1 | 1 | 1 | 1 | | |
| 7 | 5JJ–18101–00 | SHIFT SHAFT ASSY | 1 | 1 | 1 | 1 | | |
| 8 | 90508–29012 | .SPRING, TORSION | 1 | 1 | 1 | 1 | | |
| 9 | 5JJ–18112–00 | ARM, SHIFT | 1 | 1 | 1 | 1 | | |
| 10 | 5JJ–18116–00 | JOINT, ROD 1 | 1 | 1 | 1 | 1 | | |
| 11 | 4XV–18154–00 | COVER, DUST | 1 | 1 | 1 | 1 | | |
| 12 | 90111–06019 | BOLT | 1 | 1 | 1 | 1 | | |
| 13 | 95824–06020 | BOLT, FLANGE | 1 | 1 | 1 | 1 | | |
| 14 | 4XV–18115–00 | ROD, SHIFT | 1 | 1 | 1 | 1 | | |
| 15 | 90170–06228 | NUT(COUNTER CLOCKWISE) | 1 | 1 | 1 | 1 | | |
| 16 | 95304–06700 | NUT | 1 | 1 | 1 | 1 | | |
| 17 | 5JJ–18110–00 | SHIFT PEDAL ASSY | 1 | 1 | 1 | 1 | | |
| 18 | 4XV–18154–00 | .COVER, DUST | 1 | 1 | 1 | 1 | | |
| 19 | 90506–14002 | SPRING, TENSION | 1 | 1 | 1 | 1 | | |

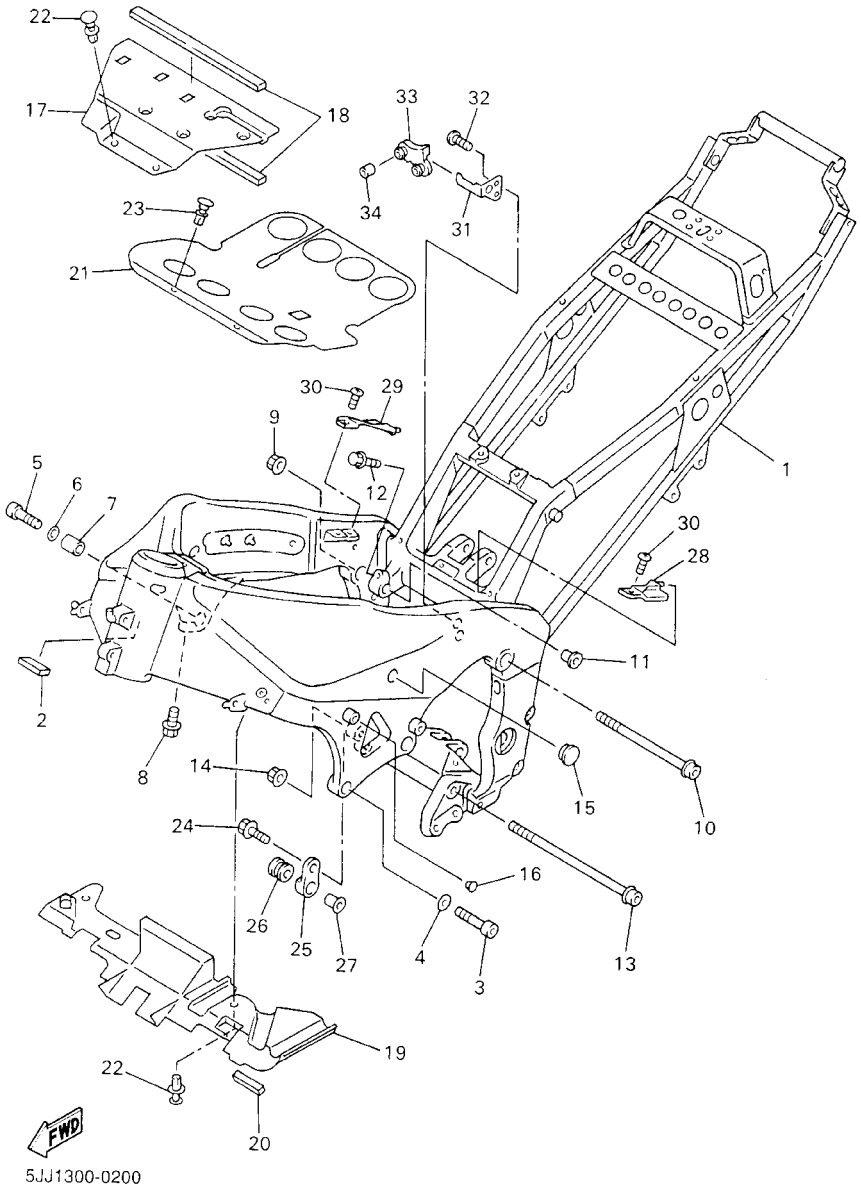


FIG. 20 FRAME

| REF. NO. | PART NO. | DESCRIPTION | 5JJ4 | 5JJ5 | 5JJ6 | 5JJ3 | | REMARKS |
|---|---|---|---|---|---|---|---|---|
| 1 | 5JJ–21110–00 | FRAME COMP. | 1 | 1 | 1 | 1 | | |
| 2 | 1KT–21746–00 | DAMPER | 1 | 1 | 1 | 1 | | |
| 3 | 91314–10040 | BOLT | 2 | 2 | 2 | 2 | | |
| 4 | 90201–10008 | WASHER, PLATE | 2 | 2 | 2 | 2 | | |
| 5 | 91314–10050 | BOLT | 1 | 1 | 1 | 1 | | |
| 6 | 90201–10008 | WASHER, PLATE | 1 | 1 | 1 | 1 | | |
| 7 | 90387–12002 | COLLAR | 1 | 1 | 1 | 1 | | |
| 8 | 95024–08035 | BOLT, FLANGE | 1 | 1 | 1 | 1 | | |
| 9 | 90185–10002 | NUT, SELF–LOCKING | 1 | 1 | 1 | 1 | | |
| 10 | 90109–104G5 | BOLT | 1 | 1 | 1 | 1 | | |
| 11 | 90387–1112F | COLLAR | 1 | 1 | 1 | 1 | | |
| 12 | 95024–08035 | BOLT, FLANGE | 1 | 1 | 1 | 1 | | |
| 13 | 90109–104G5 | BOLT | 1 | 1 | 1 | 1 | | |
| 14 | 90185–10002 | NUT, SELF–LOCKING | 1 | 1 | 1 | 1 | | |
| 15 | 90338–15202 | PLUG | 2 | 2 | 2 | 2 | | |
| 16 | 90338–07124 | PLUG | 1 | 1 | 1 | 1 | | |
| 17 | 4XV–2117M–00 | COVER 2 | 1 | 1 | 1 | 1 | | |
| 18 | 4XV–28371–00 | DAMPER | 2 | 2 | 2 | 2 | | |
| 19 | 4XV–2137Y–01 | GUIDE, AIR | 1 | 1 | 1 | 1 | | |
| 20 | 1KT–21746–00 | DAMPER | 1 | 1 | 1 | 1 | | |
| 21 | 4XV–2117F–00 | COVER | 1 | 1 | 1 | 1 | | |
| 22 | 90269–07077 | RIVET | 4 | 4 | 4 | 4 | | |
| 23 | 90269–07084 | RIVET | 2 | 2 | 2 | 2 | | |
| 24 | 95827–08025 | BOLT, FLANGE | 1 | 1 | 1 | 1 | | |
| 25 | 4XV–21446–00 | STAY, MUFFLER 2 | 1 | 1 | 1 | 1 | | |
| 26 | 4XV–27424–00 | DAMPER, FOOTREST 2 | 1 | 1 | 1 | 1 | | |
| 27 | 90387–08005 | COLLAR | 1 | 1 | 1 | 1 | | |

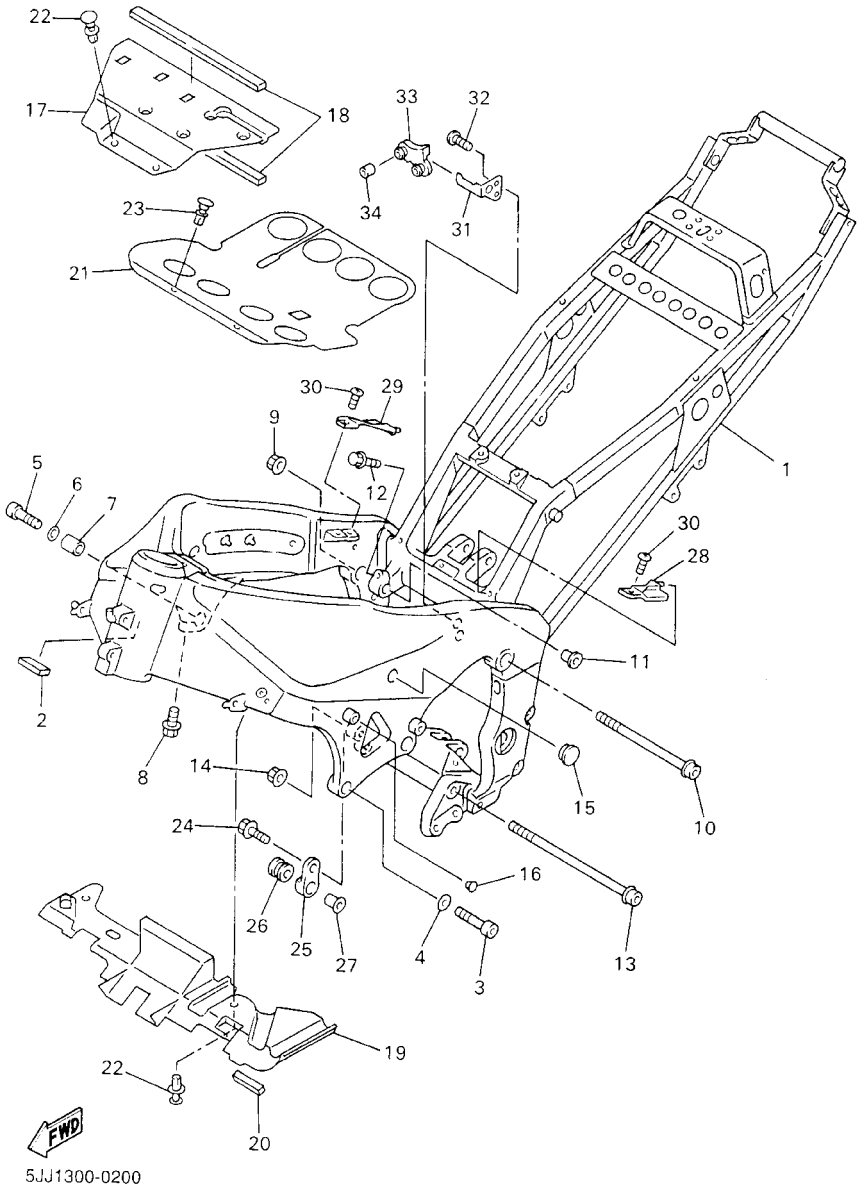


FIG. 20 FRAME

| REF. NO. | PART NO. | DESCRIPTION | 5JJ4 | 5JJ5 | 5JJ6 | 5JJ3 | | REMARKS |
|---|---|---|---|---|---|---|---|---|
| 28 | 4XV–2117N–00 | COVER 3 | 1 | 1 | 1 | 1 | | |
| 29 | 4XV–2117R–00 | COVER 4 | 1 | 1 | 1 | 1 | | |
| 30 | 90154–05013 | SCREW, BINDING | 2 | 2 | 2 | 2 | | |
| 31 | 4XV–2116J–00 | BRACKET 7 | 1 | 1 | 1 | 1 | | |
| 32 | 98907–06016 | SCREW, BIND | 2 | 2 | 2 | 2 | | |
| 33 | 4XV–2116A–00 | STAY 1 | 1 | 1 | 1 | 1 | | |
| 34 | 90387–061K9 | COLLAR | 2 | 2 | 2 | 2 | | |

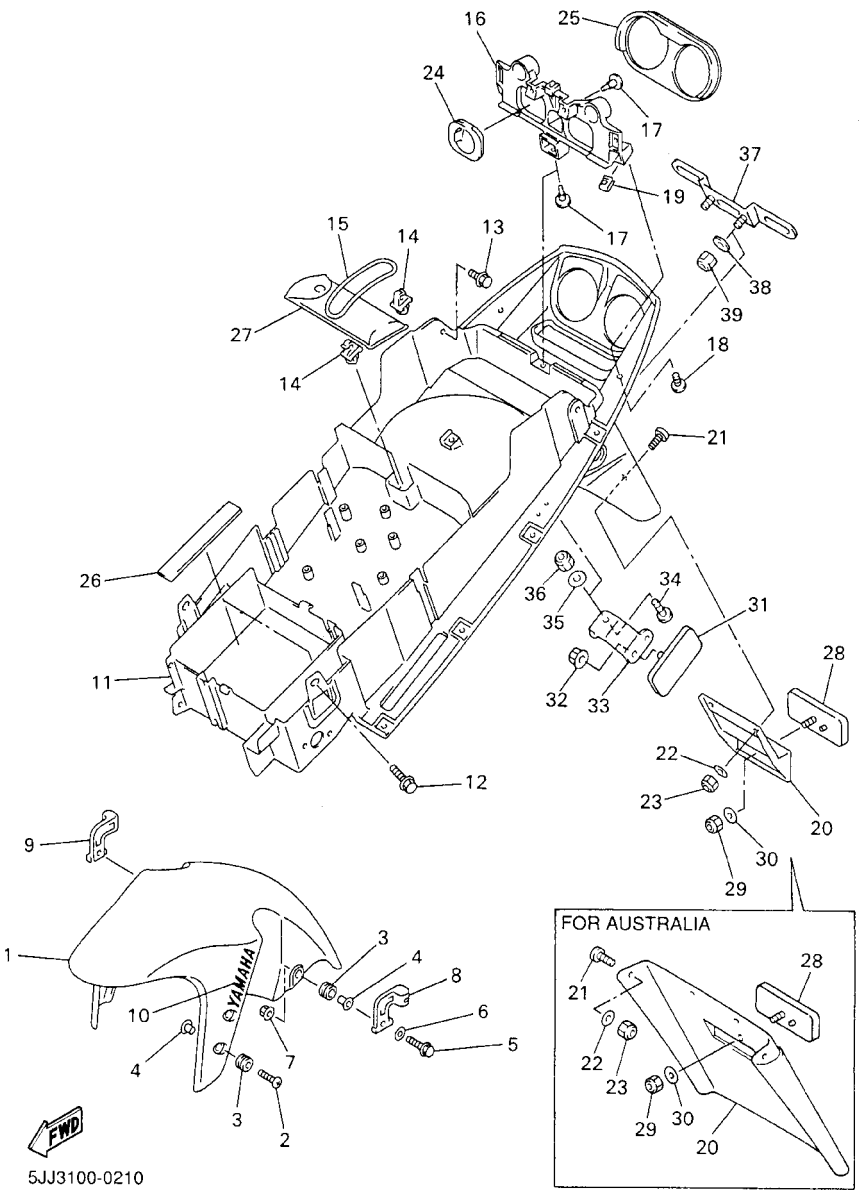


FIG. 21 FENDER

| REF. NO. | PART NO. | DESCRIPTION | 5JJ4 | 5JJ5 | 5JJ6 | 5JJ3 | | REMARKS |
|---|---|---|---|---|---|---|---|---|
| 1 | 4XV–21511–01–P0 | FENDER, FRONT | 1 | 1 | 1 | 1 | | VRC1 |
| | 4XV–21511–01–P1 | FENDER, FRONT | 1 | 1 | 1 | 1 | | DPBMC |
| 2 | 90154–06061 | SCREW, BINDING | 4 | 4 | 4 | 4 | | |
| 3 | 90480–12072 | GROMMET | 6 | 6 | 6 | 6 | | |
| 4 | 90387–065J6 | COLLAR | 6 | 6 | 6 | 6 | | |
| 5 | 97007–06030 | BOLT | 2 | 2 | 2 | 2 | | |
| 6 | 92907–06600 | WASHER, PLATE | 2 | 2 | 2 | 2 | | |
| 7 | 95707–06500 | NUT, FLANGE | 2 | 2 | 2 | 2 | | |
| 8 | 4XV–25875–00 | HOLDER, BRAKE HOSE 1 | 1 | 1 | 1 | 1 | | |
| 9 | 4XV–25876–00 | HOLDER, BRAKE HOSE 2 | 1 | 1 | 1 | 1 | | |
| 10 | 99241–00100 | EMBLEM, YAMAHA | 2 | 2 | 2 | 2 | | |
| 11 | 5JJ–21611–00 | FENDER, REAR | 1 | 1 | 1 | | | |
| | 5JJ–21611–10 | FENDER, REAR | | | | 1 | | |
| 12 | 90119–06010 | BOLT, WITH WASHER | 2 | 2 | 2 | 2 | | |
| 13 | 90119–06009 | BOLT, WITH WASHER | 2 | 2 | 2 | 2 | | |
| 14 | 90464–07259 | CLAMP | 2 | 2 | 2 | 2 | | |
| 15 | 4XV–21376–00 | BAND, TOOL | 1 | 1 | 1 | 1 | | |
| 16 | 5JJ–2117E–00 | BRACKET, TAILLIGHT | 1 | 1 | 1 | 1 | | |
| 17 | 90269–07077 | RIVET | 3 | 3 | 3 | 3 | | |
| 18 | 90154–05013 | SCREW, BINDING | 2 | 2 | 2 | 2 | | |
| 19 | 90183–05061 | NUT, SPRING | 2 | 2 | 2 | 2 | | |
| 20 | 4XV–85132–00 | BRACKET, REFLECTOR 1 | 1 | 1 | 1 | | | |
| | 4XV–21621–00 | FLAP | | | | 1 | | |
| 21 | 90149–04278 | SCREW | 2 | 2 | 2 | | | |
| | 90149–04278 | SCREW | | | | 4 | | |
| 22 | 90201–04018 | WASHER, PLATE | 2 | 2 | 2 | | | |
| | 90201–04018 | WASHER, PLATE | | | | 4 | | |

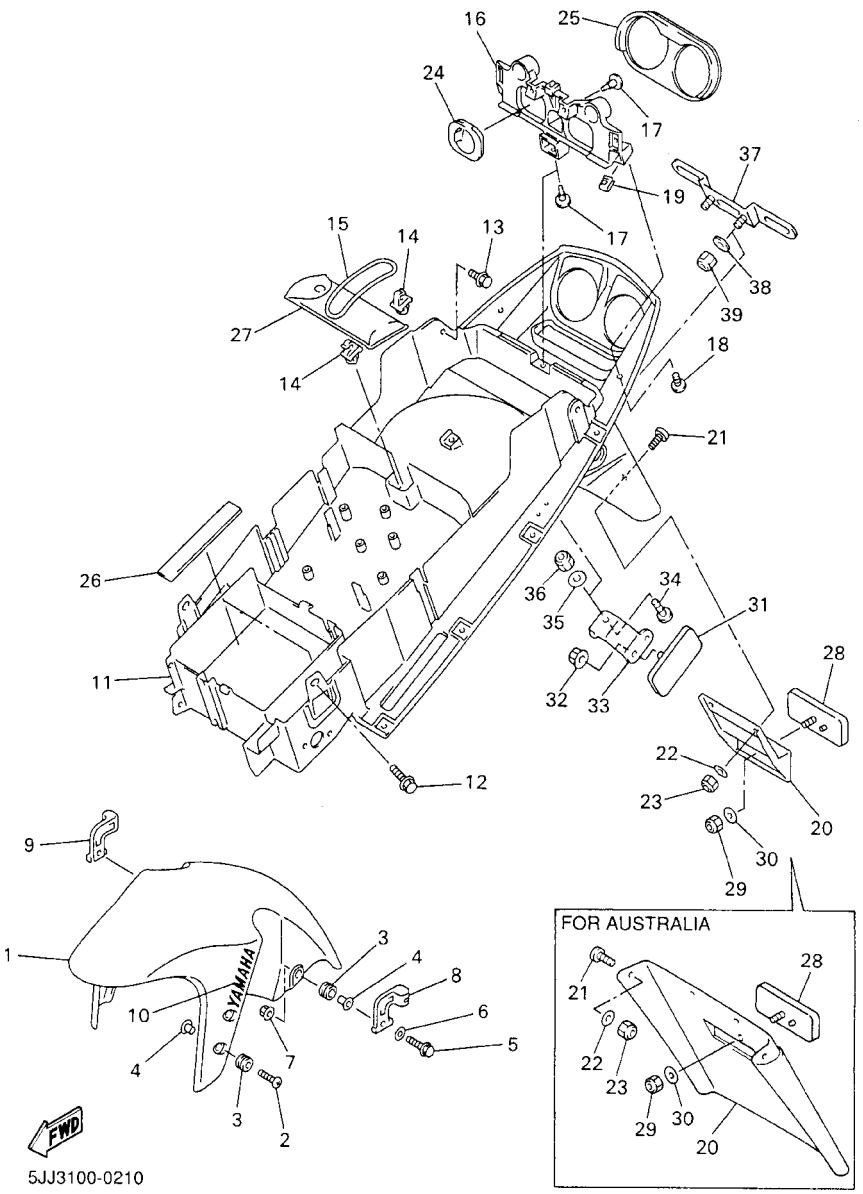


FIG. 21 FENDER

| REF. NO. | PART NO. | DESCRIPTION | 5JJ4 | 5JJ5 | 5JJ6 | 5JJ3 | | REMARKS |
|---|---|---|---|---|---|---|---|---|
| 23 | 95607–04100 | NUT, U | 2 | 2 | 2 | | | |
| | 95607–04100 | NUT, U | | | | 4 | | |
| 24 | 5JJ–2172X–00 | COVER, TAILLIGHT | 2 | 2 | 2 | 2 | | |
| 25 | 5JJ–21669–01 | SEAL | 1 | 1 | 1 | 1 | | |
| 26 | 1AE–2834E–00 | DAMPER | 2 | 2 | 2 | 2 | | |
| 27 | 4XV–28100–00 | TOOL KIT | 1 | 1 | 1 | 1 | | |
| 28 | 3Y6–85130–02 | REAR REFLECTOR ASSY | 1 | 1 | 1 | 1 | | |
| 29 | 95607–05100 | NUT, U | 1 | 1 | 1 | 1 | | |
| 30 | 90201–05725 | WASHER, PLATE | 1 | 1 | 1 | 1 | | |
| 31 | 3Y6–85130–02 | REAR REFLECTOR ASSY | 2 | 2 | 2 | | | |
| 32 | 95707–05500 | NUT, FLANGE | 2 | 2 | 2 | | | |
| 33 | 4XV–21688–00 | BRACKET, REAR STAY | 2 | 2 | 2 | | | |
| 34 | 90149–04278 | SCREW | 2 | 2 | 2 | | | |
| 35 | 90201–04018 | WASHER, PLATE | 2 | 2 | 2 | | | |
| 36 | 95607–04100 | NUT, U | 2 | 2 | 2 | | | |
| 37 | 5JJ–84751–00 | BRACKET, LICENSE | 1 | 1 | 1 | | | |
| 38 | 90201–06057 | WASHER, PLATE | 2 | 2 | 2 | | | |
| 39 | 95607–06100 | NUT, U | 2 | 2 | 2 | | | |

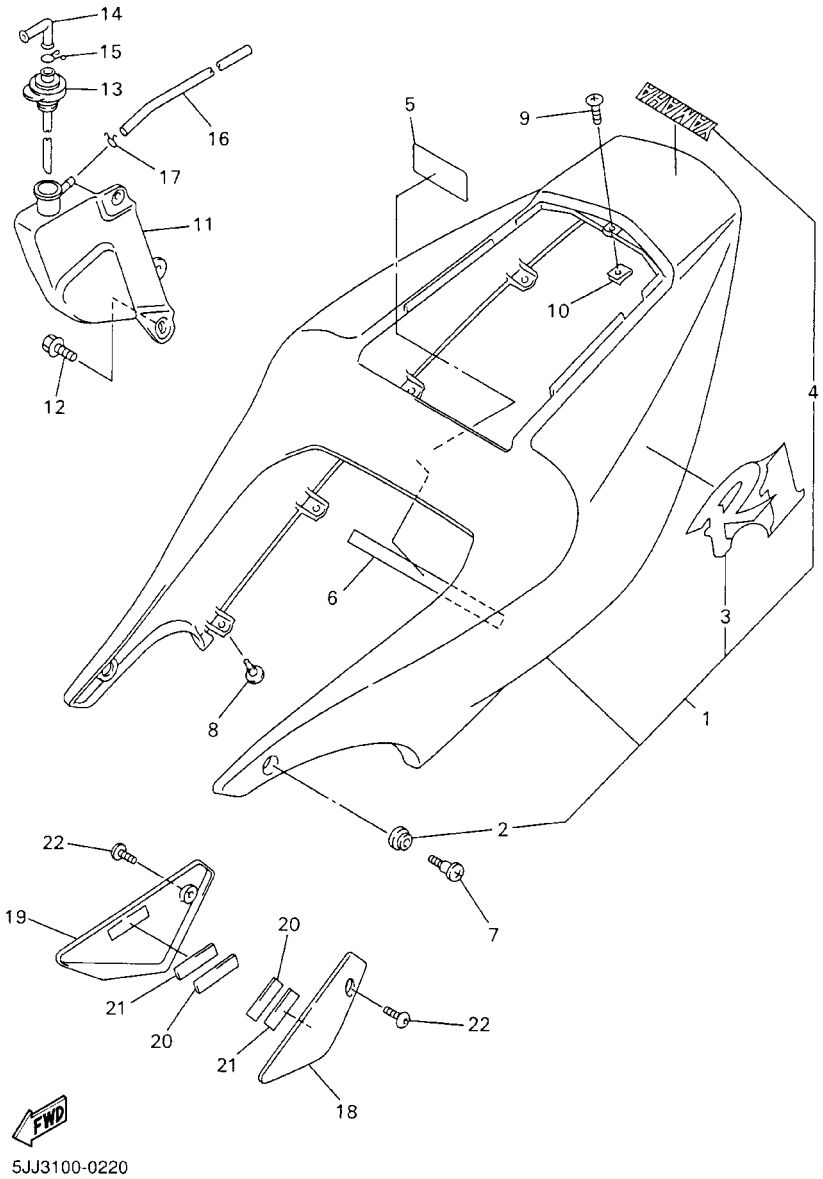


FIG. 22 SIDE COVER

| REF. NO. | PART NO. | DESCRIPTION | 5JJ4 | 5JJ5 | 5JJ6 | 5JJ3 | | REMARKS |
|---|---|---|---|---|---|---|---|---|
| * 1 | 5JJ–Y2171–11–P0 | COVER, SIDE 1 | 1 | 1 | 1 | 1 | | UR VRC1 |
| | 5JJ–Y2171–01–P1 | COVER, SIDE 1 | 1 | 1 | 1 | 1 | | UR DPBMC |
| 2 | 90480–13398 | .GROMMET | 2 | 2 | 2 | 2 | | |
| * 3 | 4XV–21781–40 | .EMBLEM 1 | 2 | 2 | 2 | 2 | | UR FOR DPBMC |
| | 4XV–21781–30 | .EMBLEM 1 | 2 | 2 | 2 | 2 | | UR FOR VRC1 |
| 4 | 99241–00080 | .EMBLEM, YAMAHA | 1 | 1 | 1 | 1 | | |
| 5 | 5JJ–2179V–00 | PLATE, EPA 1(NON CALIFORNIA) | 1 | | | | | |
| | 5JJ–2179R–00 | PLATE, EPA 2(CALIFORNIA) | | 1 | | | | |
| 6 | 5JJ–21746–00 | DAMPER | 1 | 1 | 1 | 1 | | |
| 7 | 90150–06036 | SCREW, ROUND HEAD | 2 | 2 | 2 | 2 | | |
| 8 | 90269–07077 | RIVET | 8 | 8 | 8 | 8 | | |
| 9 | 90150–05039 | SCREW, ROUND HEAD | 1 | 1 | 1 | 1 | | |
| 10 | 90183–05061 | NUT, SPRING | 1 | 1 | 1 | 1 | | |
| 11 | 4XV–21871–00 | TANK, RECOVERY | 1 | 1 | 1 | 1 | | |
| 12 | 90119–06117 | BOLT, WITH WASHER | 2 | 2 | 2 | 2 | | |
| 13 | 4XV–21875–00 | CAP | 1 | 1 | 1 | 1 | | |
| 14 | 26H–21828–00 | ELBOW | 1 | 1 | 1 | 1 | | |
| 15 | 90467–11019 | CLIP | 1 | 1 | 1 | 1 | | |
| 16 | 90445–086J6 | HOSE | 1 | 1 | 1 | 1 | | |
| 17 | 90467–08003 | CLIP | 1 | 1 | 1 | 1 | | |
| 18 | 5JJ–24129–00 | COVER, SIDE 1 | 1 | 1 | 1 | 1 | | |
| 19 | 5JJ–24139–00 | COVER, SIDE 2 | 1 | 1 | 1 | 1 | | |
| 20 | 4XV–2411G–00 | HOOK, SIDE COVER | 2 | 2 | 2 | 2 | | |
| 21 | 4XV–2411H–00 | HOOK, SIDE COVER 2 | 2 | 2 | 2 | 2 | | |
| 22 | 90110–05201 | BOLT, HEXAGON SOCKET HEAD | 2 | 2 | 2 | 2 | | |

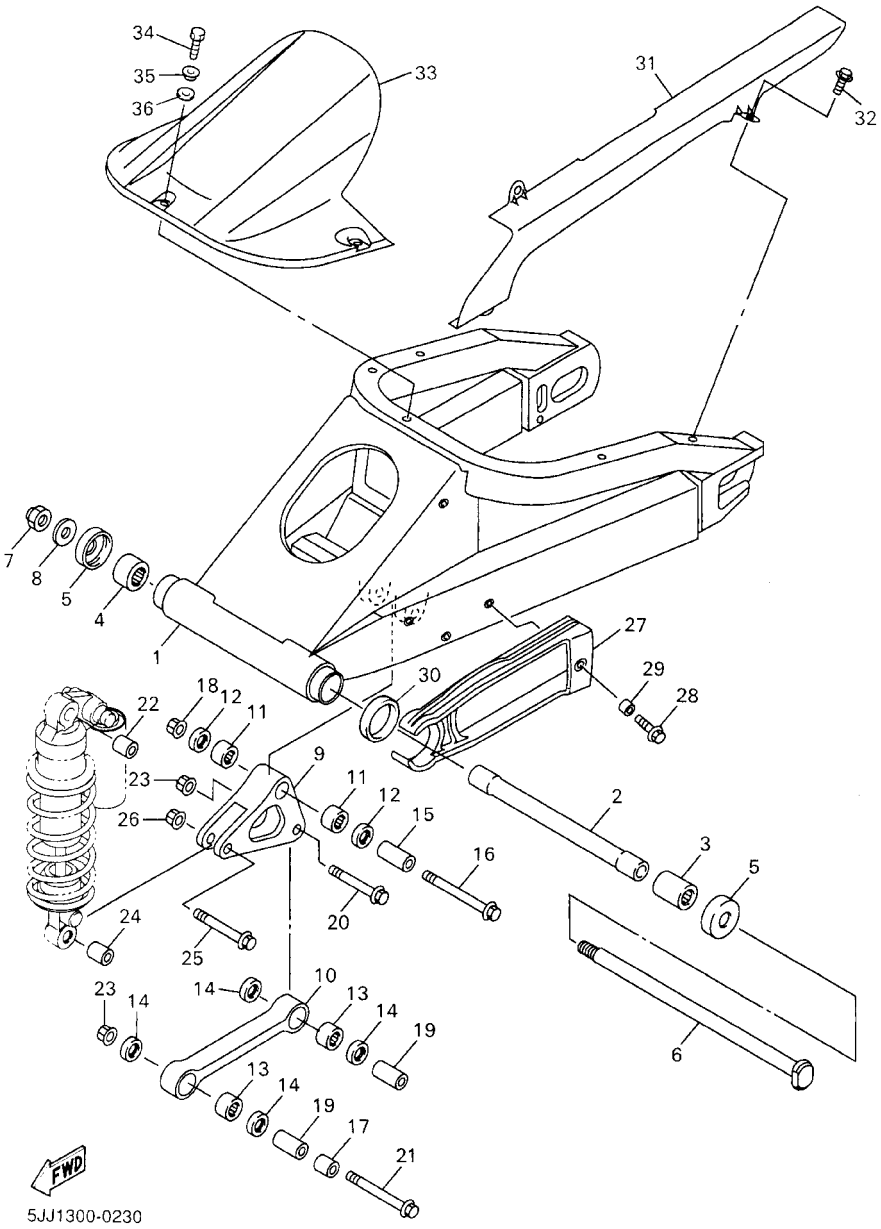


FIG. 23 REAR ARM

| REF. NO. | PART NO. | DESCRIPTION | 5JJ4 | 5JJ5 | 5JJ6 | 5JJ3 | | REMARKS |
|---|---|---|---|---|---|---|---|---|
| 1 | 5JJ–22110–00 | REAR ARM COMP. | 1 | 1 | 1 | 1 | | |
| 2 | 4XV–22184–00 | BUSH | 1 | 1 | 1 | 1 | | |
| 3 | 93315–42523 | BEARING | 1 | 1 | 1 | 1 | | |
| 4 | 93315–42536 | BEARING | 1 | 1 | 1 | 1 | | |
| 5 | 5JJ–22128–00 | COVER, THRUST 1 | 2 | 2 | 2 | 2 | | |
| 6 | 4FN–22141–00 | SHAFT, PIVOT | 1 | 1 | 1 | 1 | | |
| 7 | 90185–18167 | NUT, SELF–LOCKING | 1 | 1 | 1 | 1 | | |
| 8 | 90201–18264 | WASHER, PLATE | 1 | 1 | 1 | 1 | | |
| 9 | 4XV–2217A–00 | ARM, RELAY | 1 | 1 | 1 | 1 | | |
| 10 | 4XV–2217M–00 | ARM 1 | 1 | 1 | 1 | 1 | | |
| 11 | 93315–31758 | BEARING | 2 | 2 | 2 | 2 | | |
| 12 | 93109–17071 | OIL SEAL | 2 | 2 | 2 | 2 | | |
| 13 | 93315–31758 | BEARING | 2 | 2 | 2 | 2 | | |
| 14 | 93109–17071 | OIL SEAL | 4 | 4 | 4 | 4 | | |
| 15 | 90387–1012B | COLLAR | 1 | 1 | 1 | 1 | | |
| 16 | 90105–10021 | BOLT, WASHER BASED | 1 | 1 | 1 | 1 | | |
| 17 | 90387–1013U | COLLAR | 1 | 1 | 1 | 1 | | |
| 18 | 95607–10200 | NUT, SELF–LOCKING | 1 | 1 | 1 | 1 | | |
| 19 | 90387–1012A | COLLAR | 2 | 2 | 2 | 2 | | |
| 20 | 90105–10017 | BOLT, WASHER BASED | 1 | 1 | 1 | 1 | | |
| 21 | 90105–10018 | BOLT, WASHER BASED | 1 | 1 | 1 | 1 | | |
| 22 | 90387–1013U | COLLAR | 1 | 1 | 1 | 1 | | |
| 23 | 95607–10200 | NUT, SELF–LOCKING | 2 | 2 | 2 | 2 | | |
| 24 | 90387–1012A | COLLAR | 1 | 1 | 1 | 1 | | |
| 25 | 90105–10017 | BOLT, WASHER BASED | 1 | 1 | 1 | 1 | | |
| 26 | 95607–10200 | NUT, SELF–LOCKING | 1 | 1 | 1 | 1 | | |
| 27 | 5JJ–22151–00 | SEAL, GUARD | 1 | 1 | 1 | 1 | | |

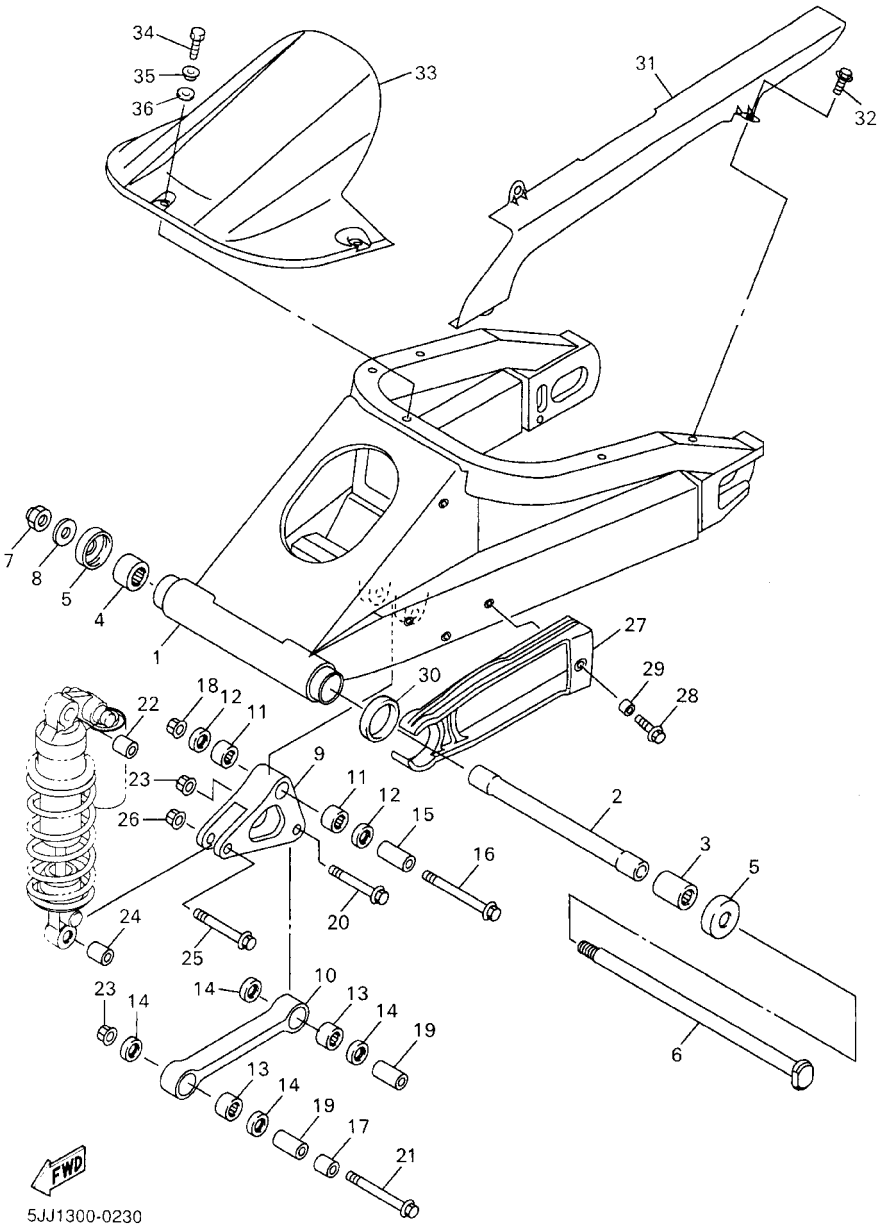


FIG. 23 REAR ARM

| REF. NO. | PART NO. | DESCRIPTION | 5JJ4 | 5JJ5 | 5JJ6 | 5JJ3 | | REMARKS |
|---|---|---|---|---|---|---|---|---|
| 28 | 90119–06096 | BOLT, WITH WASHER | 1 | 1 | 1 | 1 | | |
| 29 | 90387–06372 | COLLAR | 1 | 1 | 1 | 1 | | |
| 30 | 5JJ–2214F–00 | DAMPER 1 | 1 | 1 | 1 | 1 | | |
| 31 | 4XV–22311–01 | CASE, CHAIN | 1 | 1 | 1 | 1 | | |
| 32 | 90119–06052 | BOLT, WITH WASHER | 3 | 3 | 3 | 3 | | |
| 33 | 4XV–21650–01–33 | REAR FENDER COMP. | 1 | 1 | 1 | 1 | | UR YB FOR VRC1 |
| | 4XV–21650–01–P1 | REAR FENDER COMP. | 1 | 1 | 1 | 1 | | UR DPBMC |
| 34 | 97007–06016 | BOLT | 3 | 3 | 3 | 3 | | |
| 35 | 90387–0615J | COLLAR | 3 | 3 | 3 | 3 | | |
| 36 | 4XV–28372–00 | DAMPER | 3 | 3 | 3 | 3 | | |

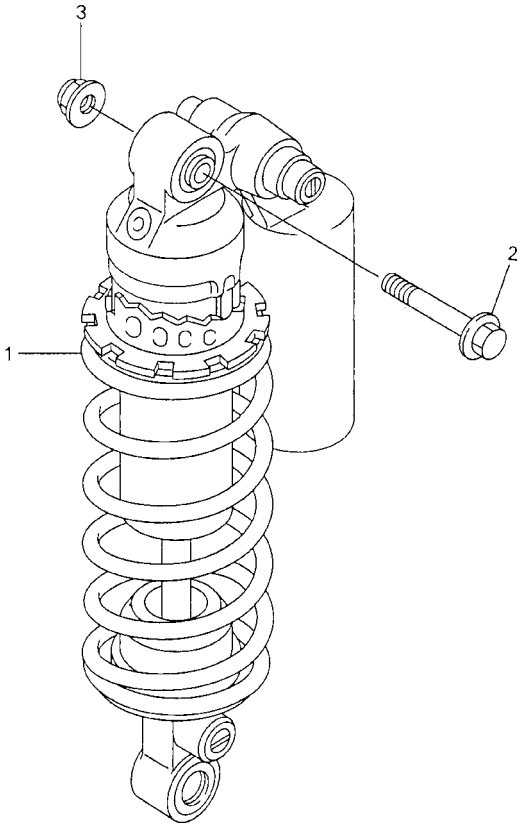

5JJ1300-0240

FIG. 24 REAR SUSPENSION

| REF. NO. | PART NO. | DESCRIPTION | 5JJ4 | 5JJ5 | 5JJ6 | 5JJ3 | | REMARKS |
|---|---|---|---|---|---|---|---|---|
| 1 | 5JJ–22210–10 | SHOCK ABSORBER ASSY, REAR | 1 | 1 | | | | |
| | 5JJ–22210–20 | SHOCK ABSORBER ASSY, REAR | | | 1 | | | |
| | 5JJ–22210–00 | SHOCK ABSORBER ASSY, REAR | | | | 1 | | |
| 2 | 90105–10020 | BOLT, WASHER BASED | 1 | 1 | 1 | 1 | | |
| 3 | 95607–10200 | NUT, SELF–LOCKING | 1 | 1 | 1 | 1 | | |

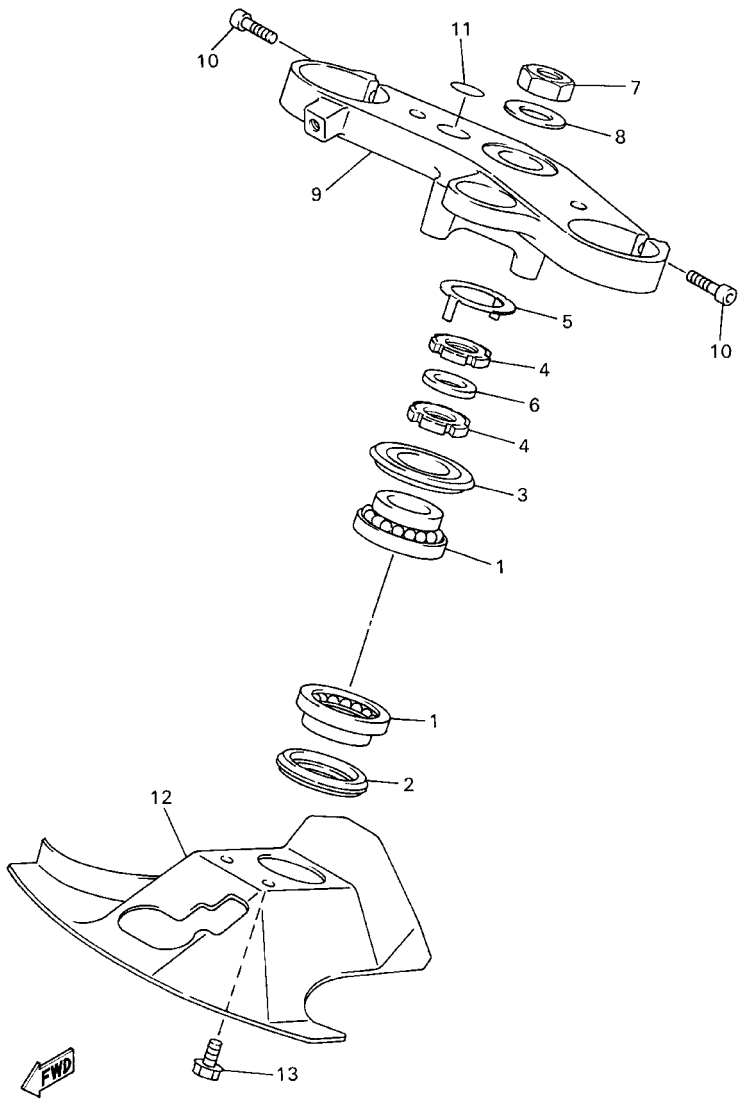


4XV352-8240

FIG. 25 STEERING

| REF. NO. | PART NO. | DESCRIPTION | 5JJ4 | 5JJ5 | 5JJ6 | 5JJ3 | | REMARKS |
|---|---|---|---|---|---|---|---|---|
| 1 | 93399–99932 | BEARING | 2 | 2 | 2 | 2 | | |
| 2 | 3FV–23462–00 | SEAL, STEERING | 1 | 1 | 1 | 1 | | |
| * 3 | 4XV–23415–01 | COVER, BALL RACE 1 | 1 | 1 | 1 | 1 | | |
| 4 | 90179–30691 | NUT | 2 | 2 | 2 | 2 | | |
| 5 | 4XV–23418–00 | WASHER, SPECIAL | 1 | 1 | 1 | 1 | | |
| 6 | 90202–30235 | WASHER, PLATE | 1 | 1 | 1 | 1 | | |
| 7 | 90170–28419 | NUT | 1 | 1 | 1 | 1 | | |
| 8 | 90201–281U8 | WASHER, PLATE | 1 | 1 | 1 | 1 | | |
| 9 | 4XV–23435–00 | CROWN, HANDLE | 1 | 1 | 1 | 1 | | |
| 10 | 91314–08030 | BOLT | 2 | 2 | 2 | 2 | | |
| 11 | 4XV–2341B–00 | EMBLEM | 1 | 1 | 1 | 1 | | |
| 12 | 4XV–23818–00 | COVER, STEERING | 1 | 1 | 1 | 1 | | |
| 13 | 90119–06114 | BOLT, WITH WASHER | 2 | 2 | 2 | 2 | | |

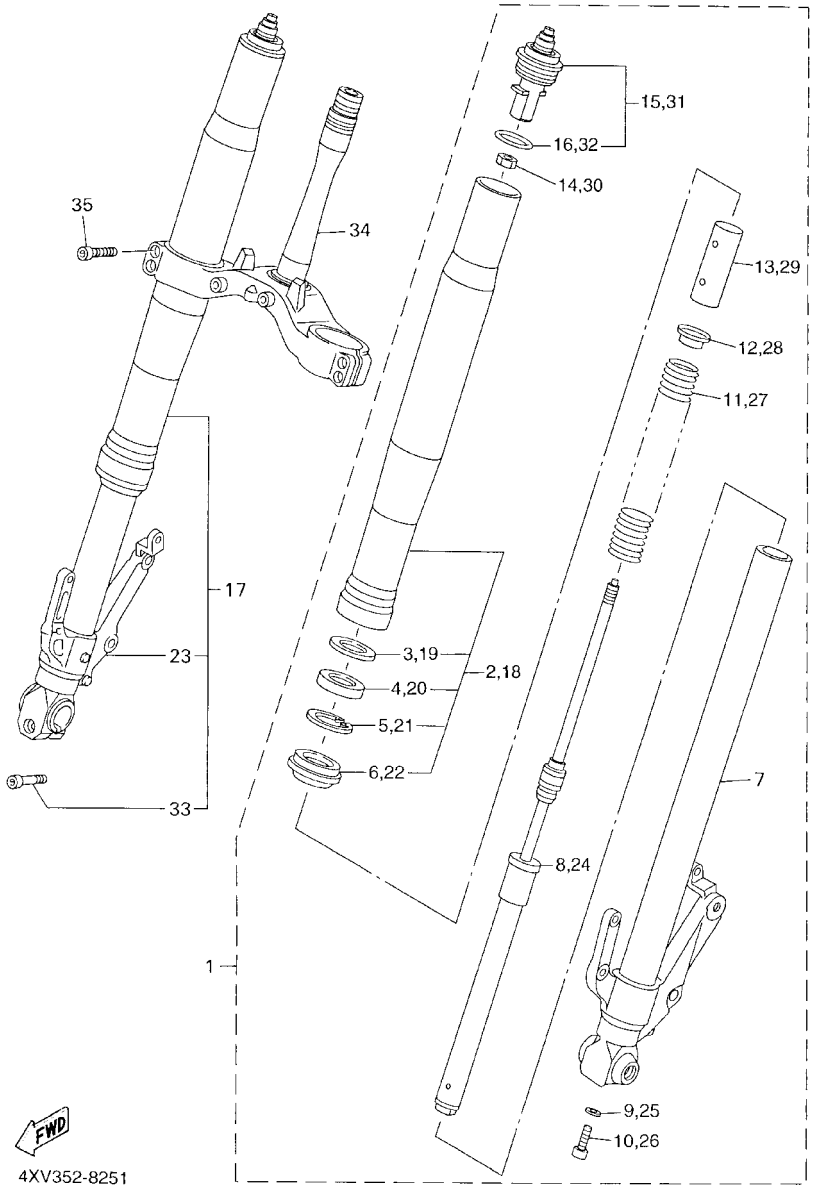


FIG. 26 FRONT FORK

| REF. NO. | PART NO. | DESCRIPTION | 5JJ4 | 5JJ5 | 5JJ6 | 5JJ3 | | REMARKS |
|---|---|---|---|---|---|---|---|---|
| 1 | 5JJ–23102–00 | FRONT FORK ASSY (L.H) | 1 | 1 | 1 | 1 | | |
| 2 | 5JJ–23136–00 | .TUBE, OUTER (RIGHT) | 1 | 1 | 1 | 1 | | |
| 3 | 5JJ–23146–00 | ..WASHER, OIL SEAL | 1 | 1 | 1 | 1 | | |
| 4 | 4XV–23145–00 | ..OIL SEAL | 1 | 1 | 1 | 1 | | |
| 5 | 26H–23156–00 | ..CLIP, OIL SEAL | 1 | 1 | 1 | 1 | | |
| 6 | 4EB–23144–00 | ..SEAL, DUST | 1 | 1 | 1 | 1 | | |
| 7 | 4XV–23110–00 | .INNER TUBE COMP.1 | 1 | 1 | 1 | 1 | | |
| 8 | 5JJ–23170–00 | .CYLINDER COMP., FRONT FORK | 1 | 1 | 1 | 1 | | |
| 9 | 2K8–23158–L0 | .GASKET | 1 | 1 | 1 | 1 | | |
| 10 | 3LC–23181–00 | .BOLT, HEXAGON SOCKET HEAD | 1 | 1 | 1 | 1 | | |
| 11 | 5JJ–23141–00 | .SPRING, FRONT FORK | 1 | 1 | 1 | 1 | | |
| 12 | 4XV–23142–00 | .SEAT, SPRING UPPER | 1 | 1 | 1 | 1 | | |
| 13 | 4XV–23118–00 | .SPACER | 1 | 1 | 1 | 1 | | |
| 14 | 3LC–23357–00 | .NUT | 1 | 1 | 1 | 1 | | |
| 15 | 4XV–23111–00 | .BOLT, CAP | 1 | 1 | 1 | 1 | | |
| 16 | 3XJ–23147–L0 | ..O–RING | 1 | 1 | 1 | 1 | | |
| 17 | 5JJ–23103–00 | FRONT FORK ASSY (R.H) | 1 | 1 | 1 | 1 | | |
| 18 | 5JJ–23136–00 | .TUBE, OUTER (RIGHT) | 1 | 1 | 1 | 1 | | |
| 19 | 5JJ–23146–00 | ..WASHER, OIL SEAL | 1 | 1 | 1 | 1 | | |
| 20 | 4XV–23145–00 | ..OIL SEAL | 1 | 1 | 1 | 1 | | |
| 21 | 26H–23156–00 | ..CLIP, OIL SEAL | 1 | 1 | 1 | 1 | | |
| 22 | 4EB–23144–00 | ..SEAL, DUST | 1 | 1 | 1 | 1 | | |
| 23 | 4XV–23120–00 | .INNER TUBE COMP.2 | 1 | 1 | 1 | 1 | | |
| 24 | 5JJ–23170–00 | .CYLINDER COMP., FRONT FORK | 1 | 1 | 1 | 1 | | |
| 25 | 2K8–23158–L0 | .GASKET | 1 | 1 | 1 | 1 | | |
| 26 | 3LC–23181–00 | .BOLT, HEXAGON SOCKET HEAD | 1 | 1 | 1 | 1 | | |
| 27 | 5JJ–23141–00 | .SPRING, FRONT FORK | 1 | 1 | 1 | 1 | | |

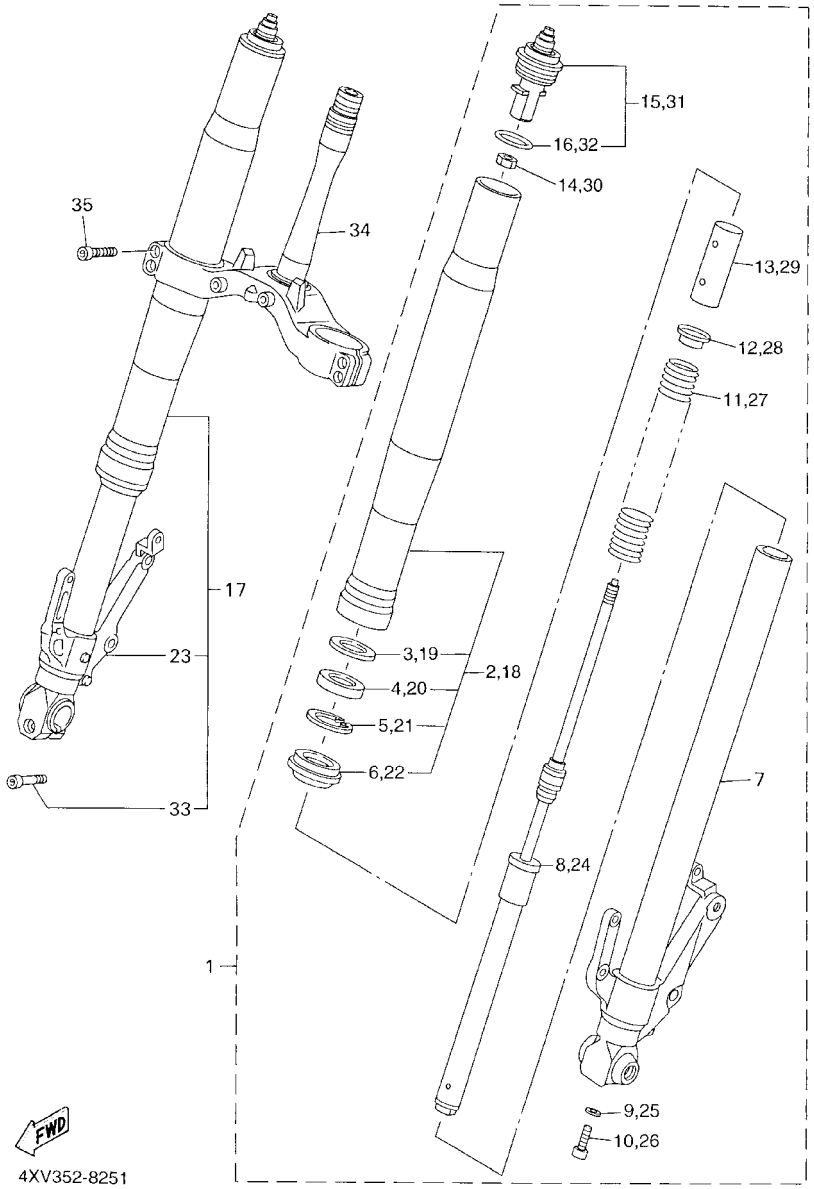


FIG. 26 FRONT FORK

| REF. NO. | PART NO. | DESCRIPTION | 5JJ4 | 5JJ5 | 5JJ6 | 5JJ3 | | REMARKS |
|---|---|---|---|---|---|---|---|---|
| 28 | 4XV–23142–00 | .SEAT, SPRING UPPER | 1 | 1 | 1 | 1 | | |
| 29 | 4XV–23118–00 | .SPACER | 1 | 1 | 1 | 1 | | |
| 30 | 3LC–23357–00 | .NUT | 1 | 1 | 1 | 1 | | |
| 31 | 4XV–23111–00 | .BOLT, CAP | 1 | 1 | 1 | 1 | | |
| 32 | 3XJ–23147–L0 | ..O–RING | 1 | 1 | 1 | 1 | | |
| 33 | 91314–08040 | .BOLT | 1 | 1 | 1 | 1 | | |
| 34 | 5JJ–23340–00 | UNDER BRACKET COMP. | 1 | 1 | 1 | 1 | | |
| 35 | 91314–08030 | BOLT | 4 | 4 | 4 | 4 | | |

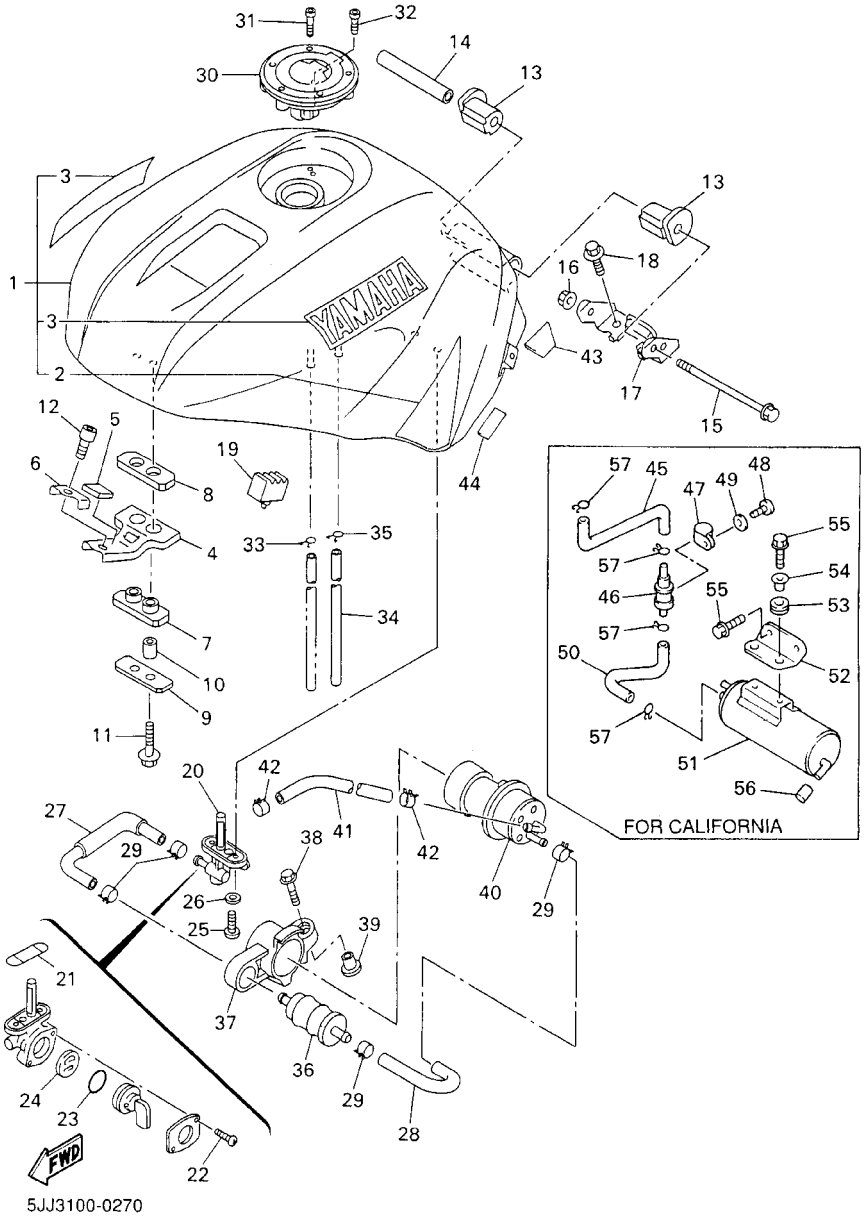


FIG. 27 FUEL TANK

| REF. NO. | PART NO. | DESCRIPTION | 5JJ4 | 5JJ5 | 5JJ6 | 5JJ3 | | REMARKS |
|---|---|---|---|---|---|---|---|---|
| 1 | 5JJ–Y2410–30–01 | FUEL TANK COMP. | 1 | 1 | 1 | 1 | | UR VRC1 |
| | 5JJ–Y2410–30–02 | FUEL TANK COMP. | 1 | 1 | 1 | 1 | | UR DPBMC |
| 2 | 5JJ–24240–00 | .GRAPHIC SET | 1 | 1 | 1 | 1 | | FOR VRC1 |
| 3 | 99221–00180 | .EMBLEM, YAMAHA | 2 | 2 | 2 | 2 | | |
| 4 | 5JJ–24191–00 | BRACKET, FUEL TANK 1 | 1 | 1 | 1 | 1 | | |
| 5 | 1AE–2837J–00 | DAMPER 5 | 1 | 1 | 1 | 1 | | |
| 6 | 5JJ–24186–00 | WASHER, SPECIAL | 1 | 1 | 1 | 1 | | |
| 7 | 2GH–24181–00 | DAMPER, LOCATING 1 | 1 | 1 | 1 | 1 | | |
| 8 | 2GH–24183–00 | DAMPER, LOCATING 3 | 1 | 1 | 1 | 1 | | |
| 9 | 5JJ–24187–00 | WASHER, SPECIAL | 1 | 1 | 1 | 1 | | |
| 10 | 90387–06006 | COLLAR | 2 | 2 | 2 | 2 | | |
| 11 | 90119–06190 | BOLT, WITH WASHER | 2 | 2 | 2 | 2 | | |
| 12 | 91314–06016 | BOLT | 1 | 1 | 1 | 1 | | |
| 13 | 4YR–24181–00 | DAMPER, LOCATING 1 | 2 | 2 | 2 | 2 | | |
| 14 | 90387–06007 | COLLAR | 1 | 1 | 1 | 1 | | |
| 15 | 95817–06110 | BOLT, FLANGE | 1 | 1 | 1 | 1 | | |
| 16 | 95607–06200 | NUT, SELF U–FLANGE | 1 | 1 | 1 | 1 | | |
| 17 | 5JJ–21348–00 | BRACKT, TANK FITTING | 1 | 1 | 1 | 1 | | |
| 18 | 90119–06044 | BOLT, WITH WASHER | 2 | 2 | 2 | 2 | | |
| 19 | 4XV–24183–00 | DAMPER, LOCATING 3 | 2 | 2 | 2 | 2 | | |
| 20 | 4KM–24500–10 | FUEL COCK ASSY 1 | 1 | 1 | 1 | 1 | | |
| 21 | 4X8–24512–00 | .O–RING | 1 | 1 | 1 | 1 | | |
| 22 | 98507–03008 | .SCREW, PAN HEAD | 2 | 2 | 2 | 2 | | |
| 23 | 3AJ–24534–00 | .SEAL, COCK | 1 | 1 | 1 | 1 | | |
| 24 | 3AJ–24523–00 | .VALVE PACKING | 1 | 1 | 1 | 1 | | |
| 25 | 90149–06011 | SCREW | 2 | 2 | 2 | 2 | | |
| 26 | 90202–05193 | WASHER, PLATE | 2 | 2 | 2 | 2 | | |

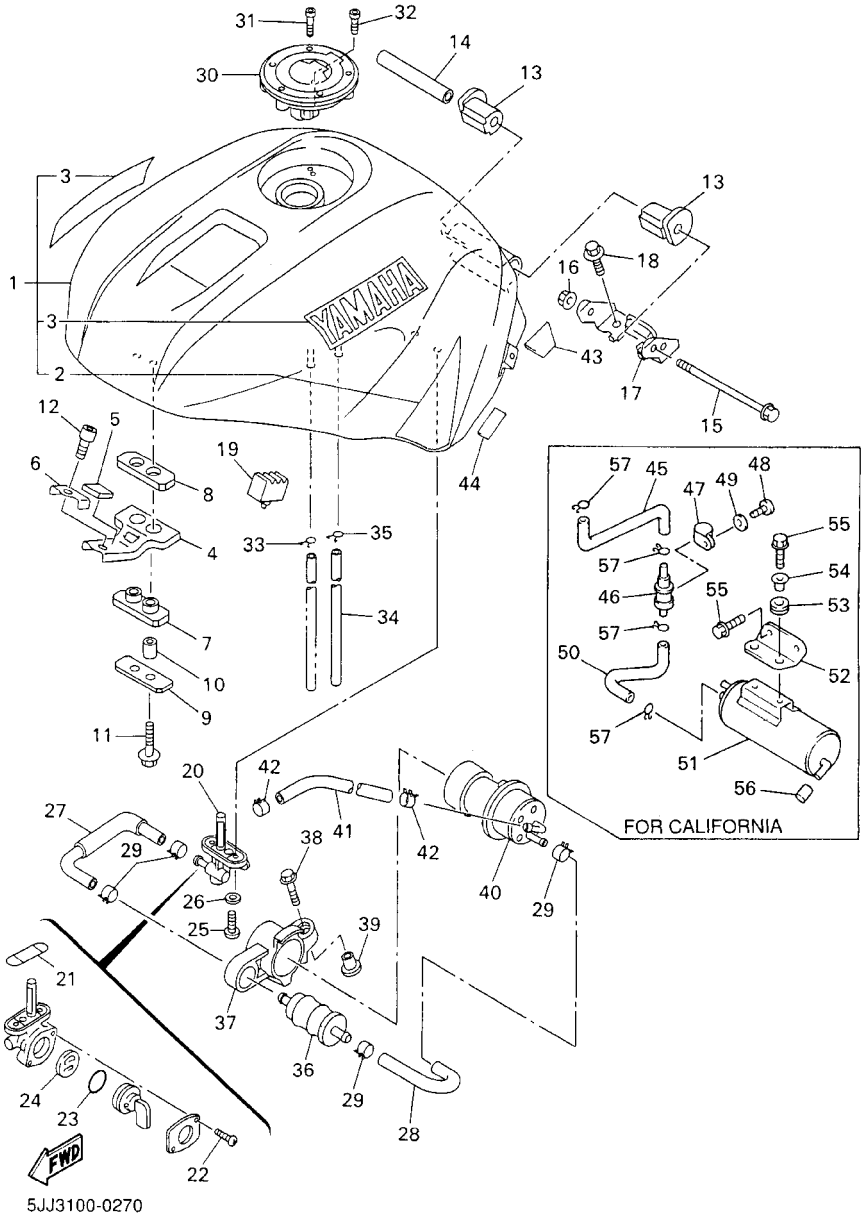


FIG. 27 FUEL TANK

| REF. NO. | PART NO. | DESCRIPTION | 5JJ4 | 5JJ5 | 5JJ6 | 5JJ3 | | REMARKS |
|---|---|---|---|---|---|---|---|---|
| 27 | 4XV–24311–00 | PIPE, FUEL 1 | 1 | 1 | 1 | 1 | | |
| 28 | 4XV–24312–00 | PIPE 2 | 1 | 1 | 1 | 1 | | |
| 29 | 90467–12124 | CLIP | 4 | 4 | 4 | 4 | | |
| 30 | 5JJ–24602–00 | CAP ASSY | 1 | 1 | 1 | 1 | | |
| 31 | 90110–05112 | BOLT, HEXAGON SOCKET HEAD | 3 | 3 | 3 | 3 | | |
| 32 | 91317–05010 | BOLT | 1 | 1 | 1 | 1 | | |
| 33 | 90467–09006 | CLIP | 1 | 1 | 1 | 1 | | |
| 34 | 90445–10015 | HOSE | 1 | | 1 | 1 | | |
| 35 | 90467–09006 | CLIP | 1 | | 1 | 1 | | |
| 36 | 1FK–24560–00 | FILTER ASSY | 1 | 1 | 1 | 1 | | |
| 37 | 4XV–24398–01 | BAND 1 | 1 | 1 | 1 | 1 | | |
| 38 | 90119–06096 | BOLT, WITH WASHER | 1 | 1 | 1 | 1 | | |
| 39 | 90387–062L2 | COLLAR | 1 | 1 | 1 | 1 | | |
| 40 | 4SV–13907–01 | FUEL PUMP COMP. | 1 | 1 | 1 | 1 | | |
| 41 | 90445–142K2 | HOSE (L200) | 1 | 1 | 1 | 1 | | |
| 42 | 90467–13123 | CLIP | 2 | 2 | 2 | 2 | | |
| 43 | 3SP–21732–00 | SEAL 1 | 2 | 2 | 2 | 2 | | |
| 44 | 5H0–8235Y–M0 | DAMPER | 2 | 2 | 2 | 2 | | |
| 45 | 4XV–24313–01 | PIPE 3 | | 1 | | | | |
| 46 | 25H–24180–00 | ROLL OVER VALVE ASSY | | 1 | | | | |
| 47 | 90461–15100 | CLAMP | | 1 | | | | |
| 48 | 98507–05012 | SCREW, PAN HEAD | | 1 | | | | |
| 49 | 92907–05600 | WASHER, PLATE | | 1 | | | | |
| 50 | 4XV–24314–00 | PIPE 4 | | 1 | | | | |
| 51 | 4XV–24170–00 | CANISTER ASSY | | 1 | | | | |
| 52 | 4XV–2419F–00 | BRACKET, CANISTOR | | 1 | | | | |
| 53 | 90480–13163 | GROMMET | | 2 | | | | |

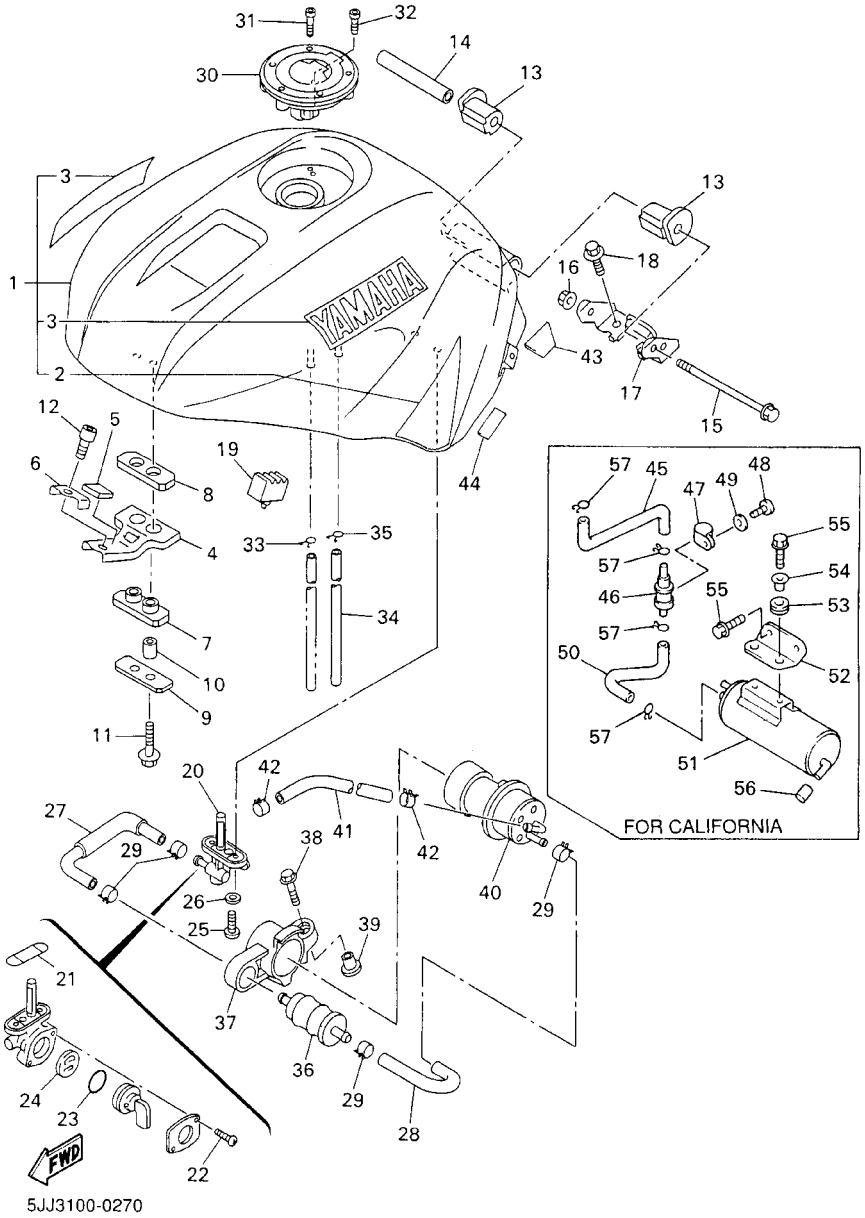


FIG. 27 FUEL TANK

| REF. NO. | PART NO. | DESCRIPTION | 5JJ4 | 5JJ5 | 5JJ6 | 5JJ3 | | REMARKS |
|---|---|---|---|---|---|---|---|---|
| 54 | 90387–062L2 | COLLAR | | 2 | | | | |
| 55 | 95027–06016 | BOLT, FLANGE | | 4 | | | | |
| 56 | 90445–11418 | HOSE (L18) | | 1 | | | | |
| 57 | 90467–10008 | CLIP | | 4 | | | | |

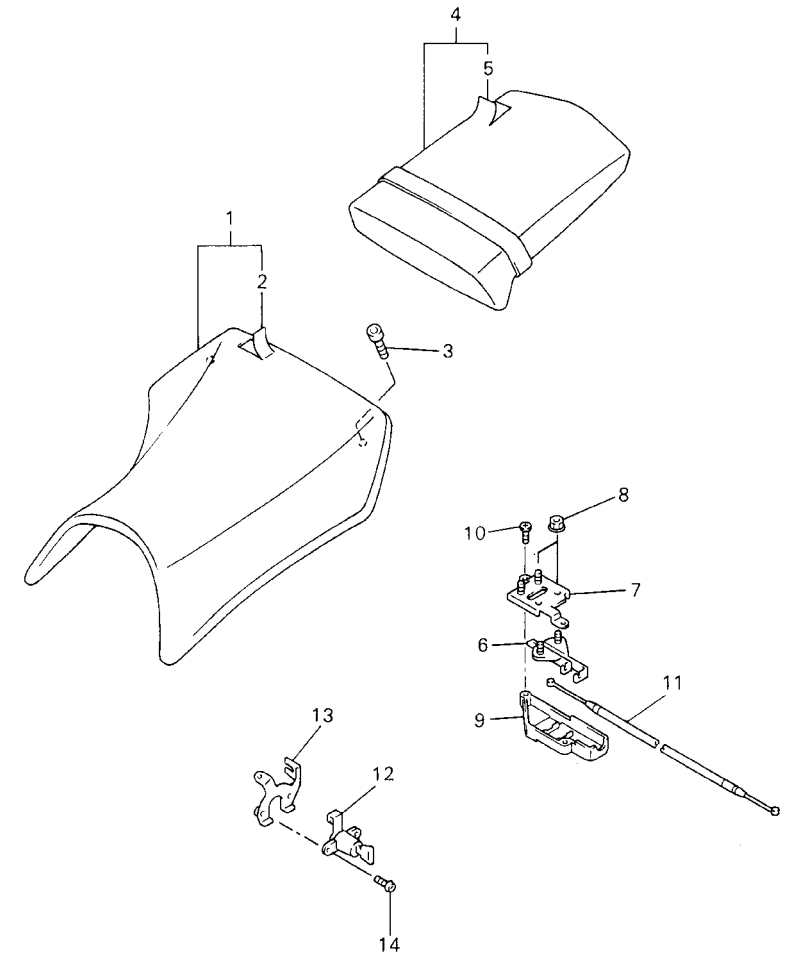


FIG. 28 SEAT

| REF. NO. | PART NO. | DESCRIPTION | 5JJ4 | 5JJ5 | 5JJ6 | 5JJ3 | | REMARKS |
|---|---|---|---|---|---|---|---|---|
| 1 | 5JJ–24710–00 | SINGLE SEAT ASSY | 1 | 1 | 1 | 1 | | |
| 2 | 5JJ–2470F–00 | .COVER, SEAT | 1 | 1 | 1 | 1 | | |
| 3 | 90110–06258 | BOLT, HEXAGON SOCKET HEAD | 2 | 2 | 2 | 2 | | |
| 4 | 5JJ–24750–00 | TANDEM SEAT ASSY | 1 | 1 | 1 | 1 | | |
| 5 | 5JJ–24751–00 | .COVER, TANDEM SEAT | 1 | 1 | 1 | 1 | | |
| 6 | 4BP–24780–00 | SEAT LOCK ASSY | 1 | 1 | 1 | 1 | | |
| 7 | 5JJ–24792–00 | PLATE | 1 | 1 | 1 | 1 | | |
| 8 | 95707–06500 | NUT, FLANGE | 4 | 4 | 4 | 4 | | |
| 9 | 5JJ–2475X–00 | COVER,2 | 1 | 1 | 1 | 1 | | |
| 10 | 97707–40012 | SCREW, TAPPING | 2 | 2 | 2 | 2 | | |
| 11 | 5JJ–2478E–00 | CABLE, SEAT LOCK | 1 | 1 | 1 | 1 | | |
| 12 | 2TV–W2470–00 | SEAT LOCK ASSY | 1 | 1 | 1 | 1 | | |
| 13 | 4XV–2117K–00 | STAY, LOCK | 1 | 1 | 1 | 1 | | |
| 14 | 90149–06308 | SCREW | 2 | 2 | 2 | 2 | | |

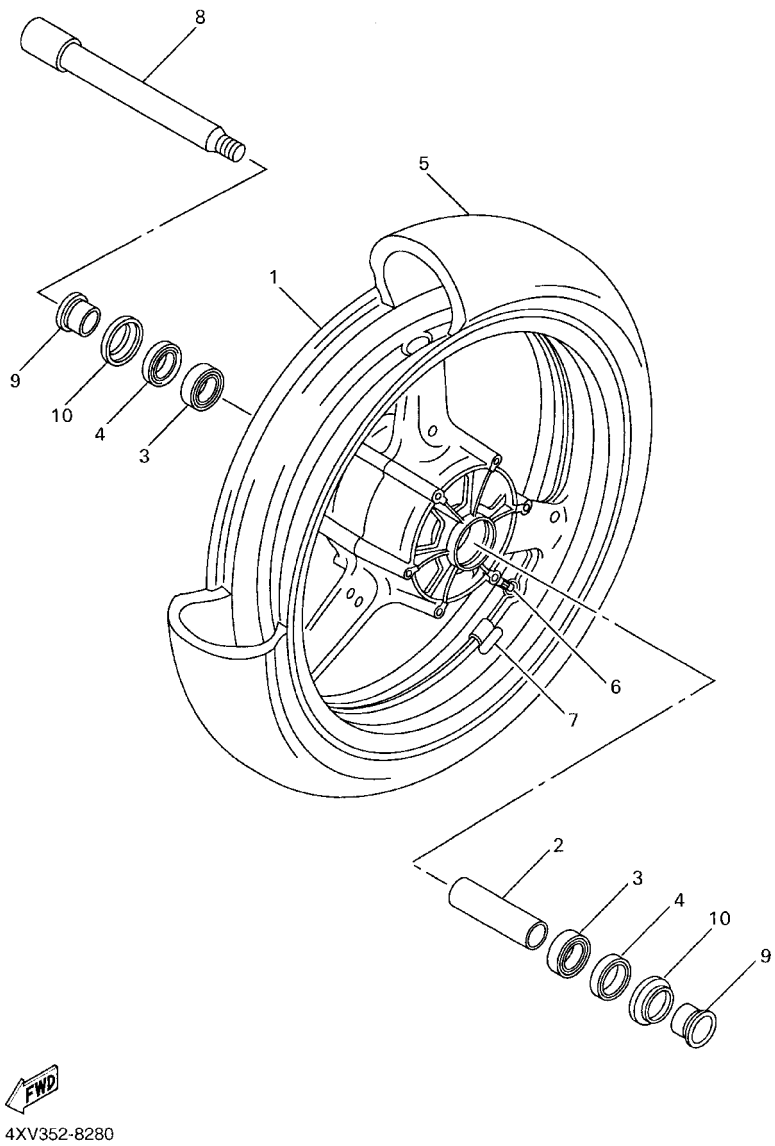


FIG. 29 FRONT WHEEL

| REF. NO. | PART NO. | DESCRIPTION | 5JJ4 | 5JJ5 | 5JJ6 | 5JJ3 | | REMARKS |
|---|---|---|---|---|---|---|---|---|
| 1 | 4XV–25168–00–33 | CAST WHEEL, FRONT | 1 | 1 | 1 | 1 | | YB |
| 2 | 4XV–25117–00 | SPACER, BEARING | 1 | 1 | 1 | 1 | | |
| 3 | 93306–00420 | BEARING (B6004) | 2 | 2 | 2 | 2 | | |
| 4 | 93106–28043 | OIL SEAL | 2 | 2 | 2 | 2 | | |
| 5 | 94112–17012 | TIRE (120/70 ZR17 D207F) | 1 | 1 | 1 | 1 | | DUNLOP |
| 6 | 93900–00030 | VALVE, RIM | 1 | 1 | 1 | 1 | | |
| 7 | 29L–25398–00 | BALANCER, WHEEL (10G) | 1 | 1 | 1 | 1 | | UN |
| | 29L–25398–10 | BALANCER, WHEEL (20G) | 1 | 1 | 1 | 1 | | UN |
| | 29L–25398–20 | BALANCER, WHEEL (30G) | 1 | 1 | 1 | 1 | | UN |
| 8 | 4XV–25181–00 | AXLE, WHEEL | 1 | 1 | 1 | 1 | | |
| 9 | 4XV–25186–00 | COLLAR, WHEEL | 2 | 2 | 2 | 2 | | |
| 10 | 4XV–25118–00 | COVER, HUB DUST | 2 | 2 | 2 | 2 | | |

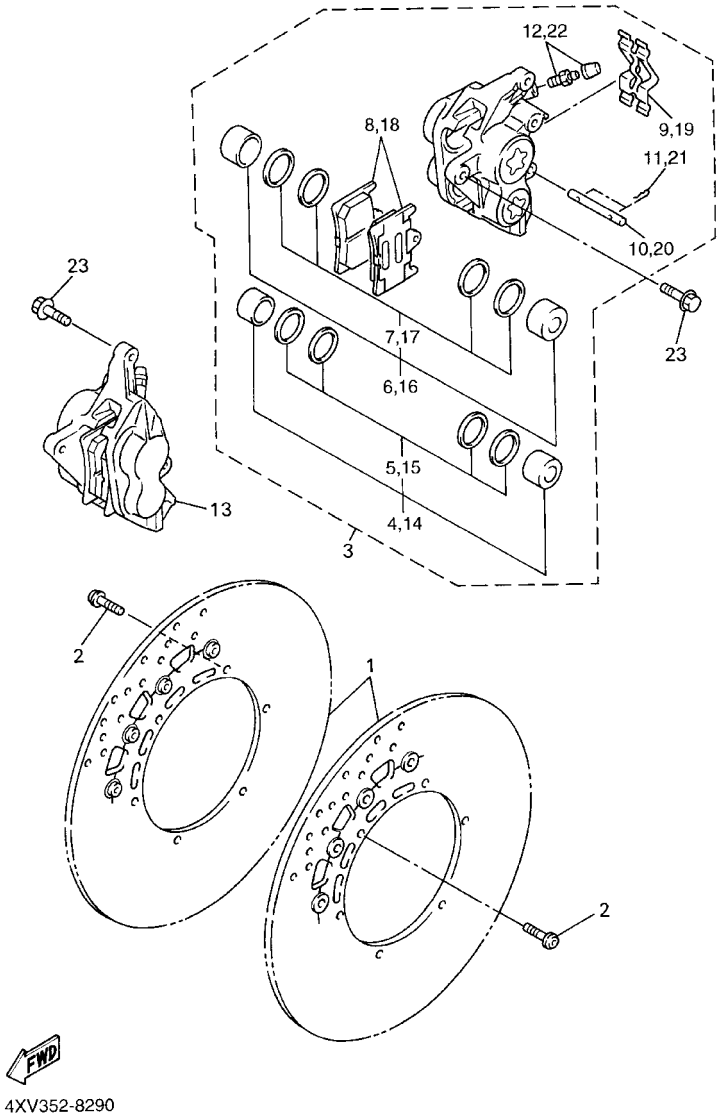


FIG. 30 FRONT BRAKE CALIPER

| REF. NO. | PART NO. | DESCRIPTION | 5JJ4 | 5JJ5 | 5JJ6 | 5JJ3 | | REMARKS |
|---|---|---|---|---|---|---|---|---|
| 1 | 5JJ–2581T–00 | DISC BRAKE ASSY | 2 | 2 | 2 | 2 | | |
| 2 | 90109–064G6 | BOLT | 12 | 12 | 12 | 12 | | |
| 3 | 5JJ–2580T–00 | CALIPER ASSY (LEFT) | 1 | 1 | 1 | 1 | | |
| 4 | 4SV–W0057–00 | .PISTON ASSY, CALIPER | 1 | 1 | 1 | 1 | | |
| 5 | 3MA–W0047–10 | ..CALIPER SEAL KIT | 1 | 1 | 1 | 1 | | |
| 6 | 4SV–W0057–10 | .PISTON ASSY, CALIPER | 1 | 1 | 1 | 1 | | |
| 7 | 3GM–W0047–10 | ..CALIPER SEAL KIT | 1 | 1 | 1 | 1 | | |
| 8 | 5JJ–W0045–00 | .BRAKE PAD KIT | 1 | 1 | 1 | 1 | | |
| 9 | 4SV–25919–00 | .SUPPORT, PAD | 1 | 1 | 1 | 1 | | |
| 10 | 4SV–25924–00 | .PIN, PAD | 1 | 1 | 1 | 1 | | |
| 11 | 3GM–25925–00 | .CLIP | 2 | 2 | 2 | 2 | | |
| 12 | 1J3–W0048–00 | .BLEED SCREW KIT | 1 | 1 | 1 | 1 | | |
| 13 | 5JJ–2580U–00 | CALIPER ASSY (RIGHT) | 1 | 1 | 1 | 1 | | |
| 14 | 4SV–W0057–00 | .PISTON ASSY, CALIPER | 1 | 1 | 1 | 1 | | |
| 15 | 3MA–W0047–10 | ..CALIPER SEAL KIT | 1 | 1 | 1 | 1 | | |
| 16 | 4SV–W0057–10 | .PISTON ASSY, CALIPER | 1 | 1 | 1 | 1 | | |
| 17 | 3GM–W0047–10 | ..CALIPER SEAL KIT | 1 | 1 | 1 | 1 | | |
| 18 | 5JJ–W0045–00 | .BRAKE PAD KIT | 1 | 1 | 1 | 1 | | |
| 19 | 4SV–25919–00 | .SUPPORT, PAD | 1 | 1 | 1 | 1 | | |
| 20 | 4SV–25924–00 | .PIN, PAD | 1 | 1 | 1 | 1 | | |
| 21 | 3GM–25925–00 | .CLIP | 2 | 2 | 2 | 2 | | |
| 22 | 1J3–W0048–00 | .BLEED SCREW KIT | 1 | 1 | 1 | 1 | | |
| 23 | 90105–105A7 | BOLT, WASHER BASED | 4 | 4 | 4 | 4 | | |

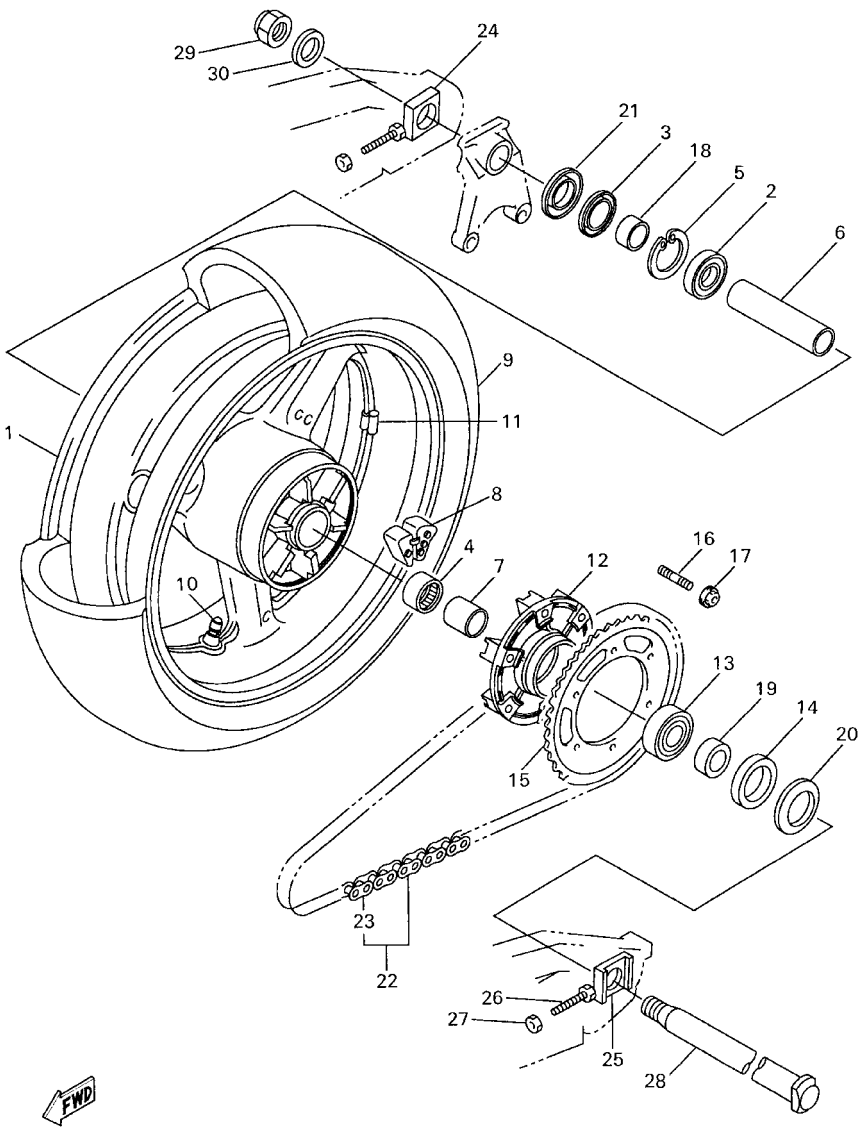


4XV352-8300

FIG. 31 REAR WHEEL

| REF. NO. | PART NO. | DESCRIPTION | 5JJ4 | 5JJ5 | 5JJ6 | 5JJ3 | | REMARKS |
|---|---|---|---|---|---|---|---|---|
| 1 | 4XV–25338–00–33 | CAST WHEEL, REAR | 1 | 1 | 1 | 1 | | YB |
| 2 | 93306–07806 | BEARING | 1 | 1 | 1 | 1 | | |
| 3 | 93106–35042 | OIL SEAL | 1 | 1 | 1 | 1 | | |
| 4 | 93317–43580 | BEARING | 1 | 1 | 1 | 1 | | |
| 5 | 99009–52500 | CIRCLIP | 1 | 1 | 1 | 1 | | |
| 6 | 4XV–25317–00 | SPACER, BEARING | 1 | 1 | 1 | 1 | | |
| 7 | 4XV–25383–00 | COLLAR, WHEEL | 1 | 1 | 1 | 1 | | |
| 8 | 4XV–25364–00 | DAMPER | 6 | 6 | 6 | 6 | | |
| 9 | 94119–17009 | TIRE (190/50 ZR17 D207) | 1 | 1 | 1 | 1 | | DUNLOP |
| 10 | 93900–00030 | VALVE, RIM | 1 | 1 | 1 | 1 | | |
| 11 | 29L–25398–00 | BALANCER, WHEEL (10G) | 1 | 1 | 1 | 1 | | UN |
| | 29L–25398–10 | BALANCER, WHEEL (20G) | 1 | 1 | 1 | 1 | | UN |
| | 29L–25398–20 | BALANCER, WHEEL (30G) | 1 | 1 | 1 | 1 | | UN |
| 12 | 5JJ–25366–00 | CLUTCH, HUB | 1 | 1 | 1 | 1 | | |
| 13 | 93306–20531 | BEARING | 1 | 1 | 1 | 1 | | |
| 14 | 93106–40013 | OIL SEAL | 1 | 1 | 1 | 1 | | |
| 15 | 4XV–25443–20 | SPROCKET, DRIVEN (43T) | 1 | 1 | 1 | 1 | | |
| 16 | 90116–10485 | BOLT, STUD | 6 | 6 | 6 | 6 | | |
| 17 | 95604–10200 | NUT, SELF–LOCKING | 6 | 6 | 6 | 6 | | |
| 18 | 4XV–25377–00 | COLLAR, WHEEL | 1 | 1 | 1 | 1 | | |
| 19 | 4XV–25376–00 | COLLAR, WHEEL | 1 | 1 | 1 | 1 | | |
| 20 | 5JJ–25367–00 | COVER, HUB DUST | 1 | 1 | 1 | 1 | | |
| 21 | 4XV–25327–00 | COVER, PLATE | 1 | 1 | 1 | 1 | | |
| 22 | 94581–69114 | CHAIN (DID50ZVM–114LL) | 1 | 1 | 1 | 1 | | |
| 23 | 94681–69031 | .JOINT, CHAIN | 1 | 1 | 1 | 1 | | |
| 24 | 4XV–25388–00 | PULLER, CHAIN 1 | 1 | 1 | 1 | 1 | | |
| 25 | 4XV–25389–00 | PULLER, CHAIN 2 | 1 | 1 | 1 | 1 | | |

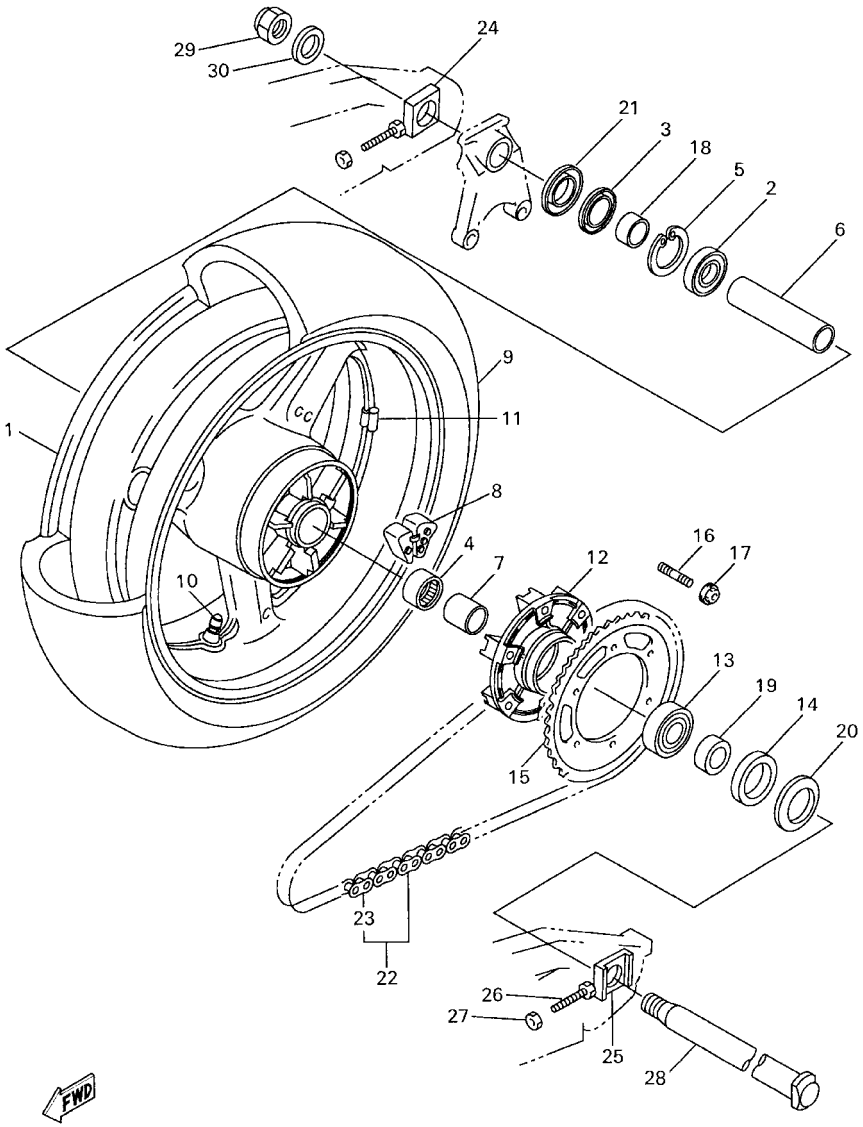


4XV352-8300

FIG. 31 REAR WHEEL

| REF. NO. | PART NO. | DESCRIPTION | 5JJ4 | 5JJ5 | 5JJ6 | 5JJ3 | | REMARKS |
|---|---|---|---|---|---|---|---|---|
| 26 | 90101–08766 | BOLT | 2 | 2 | 2 | 2 | | |
| 27 | 95307–08600 | NUT | 2 | 2 | 2 | 2 | | |
| 28 | 4XV–25381–00 | AXLE, WHEEL | 1 | 1 | 1 | 1 | | |
| 29 | 90185–24165 | NUT, SELF–LOCKING | 1 | 1 | 1 | 1 | | |
| 30 | 90201–257R5 | WASHER, PLATE | 1 | 1 | 1 | 1 | | |

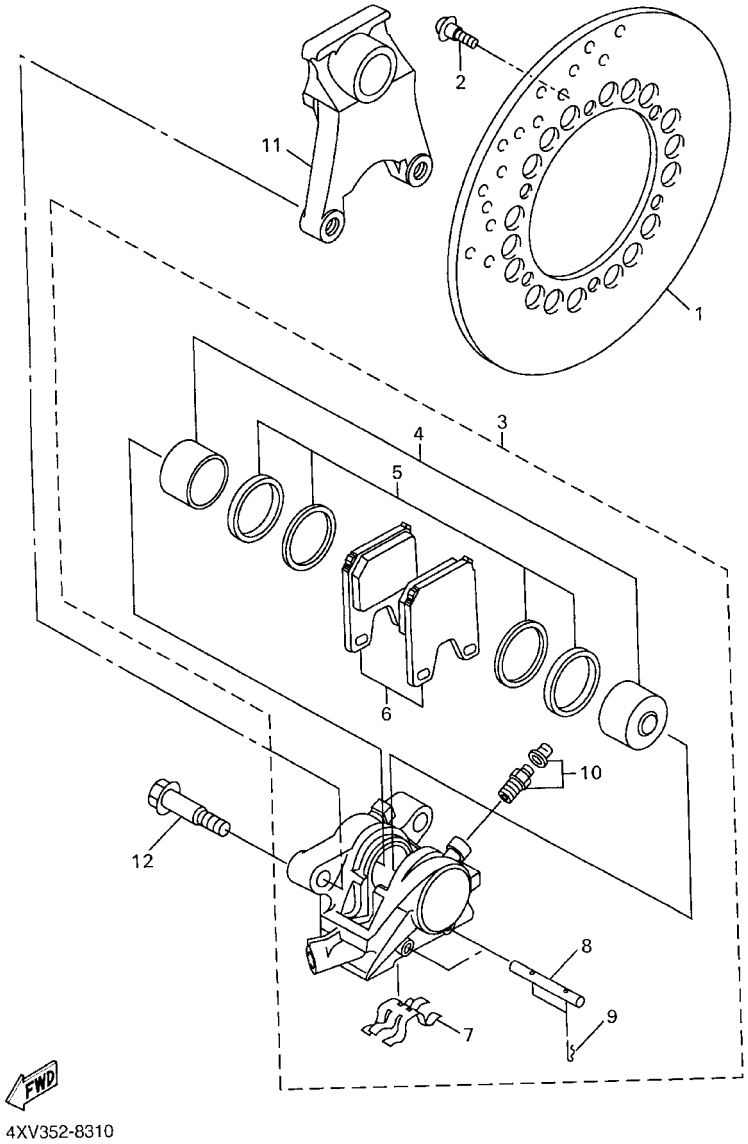


FIG. 32 REAR BRAKE CALIPER

| REF. NO. | PART NO. | DESCRIPTION | 5JJ4 | 5JJ5 | 5JJ6 | 5JJ3 | | REMARKS |
|---|---|---|---|---|---|---|---|---|
| 1 | 4XV–2582W–00 | DISC, REAR BRAKE 2 | 1 | 1 | 1 | 1 | | |
| 2 | 90109–064G6 | BOLT | 6 | 6 | 6 | 6 | | |
| 3 | 5JJ–2580W–00 | CALIPER ASSY, REAR 2 | 1 | 1 | 1 | 1 | | |
| 4 | 4XV–W0057–50 | .PISTON ASSY, CALIPER | 1 | 1 | 1 | 1 | | |
| 5 | 4XV–W0047–50 | ..CALIPER SEAL KIT | 1 | 1 | 1 | 1 | | |
| 6 | 5FL–W0046–50 | .BRAKE PAD KIT 2 | 1 | 1 | 1 | 1 | | |
| 7 | 4XV–25919–50 | .SUPPORT, PAD | 1 | 1 | 1 | 1 | | |
| 8 | 4SV–25924–00 | .PIN, PAD | 2 | 2 | 2 | 2 | | |
| 9 | 3GM–25925–00 | .CLIP | 4 | 4 | 4 | 4 | | |
| 10 | 1J3–W0048–00 | .BLEED SCREW KIT | 2 | 2 | 2 | 2 | | |
| 11 | 4XV–25819–00 | BRACKET, CALIPER | 1 | 1 | 1 | 1 | | |
| 12 | 90105–105A0 | BOLT, WASHER BASED | 2 | 2 | 2 | 2 | | |

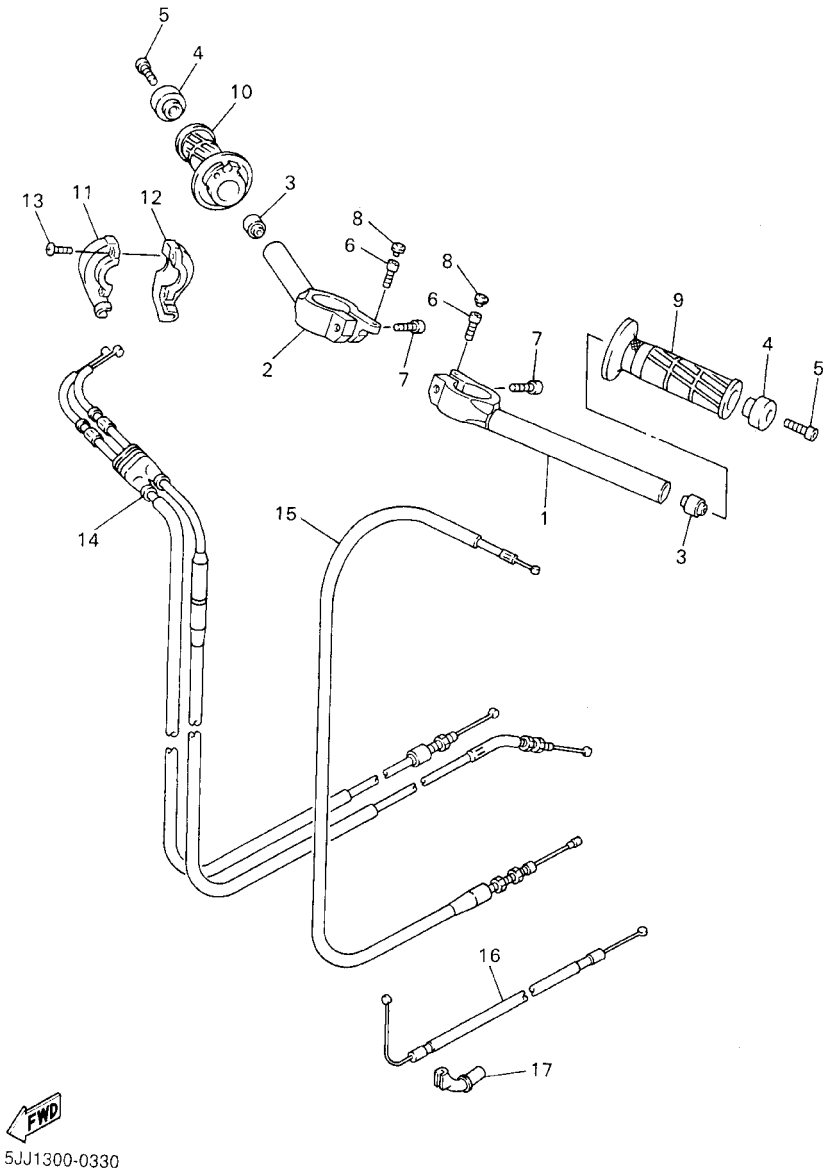


FIG. 33 STEERING HANDLE. CABLE

| REF. NO. | PART NO. | DESCRIPTION | 5JJ4 | 5JJ5 | 5JJ6 | 5JJ3 | | REMARKS |
|---|---|---|---|---|---|---|---|---|
| 1 | 4XV–26121–00 | HANDLEBAR (LEFT) | 1 | 1 | 1 | 1 | | |
| 2 | 4XV–26122–00 | HANDLEBAR (RIGHT) | 1 | 1 | 1 | 1 | | |
| 3 | 4JH–23434–00 | HOLDER, DAMPER | 2 | 2 | 2 | 2 | | |
| 4 | 4XV–26246–00 | END, GRIP | 2 | 2 | 2 | 2 | | |
| 5 | 91317–06025 | BOLT | 2 | 2 | 2 | 2 | | |
| 6 | 91317–06025 | BOLT | 2 | 2 | 2 | 2 | | |
| 7 | 91314–08030 | BOLT | 2 | 2 | 2 | 2 | | |
| 8 | 2H9–23469–00 | CAP, BOLT | 2 | 2 | 2 | 2 | | |
| 9 | 4YR–26241–01 | GRIP (LEFT) | 1 | 1 | 1 | 1 | | |
| 10 | 4YR–26240–01 | GRIP ASSY | 1 | 1 | 1 | 1 | | |
| 11 | 3XW–26281–01 | CAP, GRIP UPPER | 1 | 1 | 1 | 1 | | |
| 12 | 3XW–26282–01 | CAP, GRIP LOWER | 1 | 1 | 1 | 1 | | |
| 13 | 98507–05035 | SCREW, PAN HEAD | 2 | 2 | 2 | 2 | | |
| 14 | 4XV–26302–01 | THROTTLE CABLE ASSY | 1 | 1 | 1 | 1 | | |
| 15 | 5JJ–26335–00 | CABLE, CLUTCH | 1 | 1 | 1 | 1 | | |
| 16 | 5JJ–26331–00 | CABLE, STARTER 1 | 1 | 1 | 1 | 1 | | |
| 17 | 5JJ–26399–00 | GUIDE, CABLE | 1 | 1 | 1 | 1 | | |

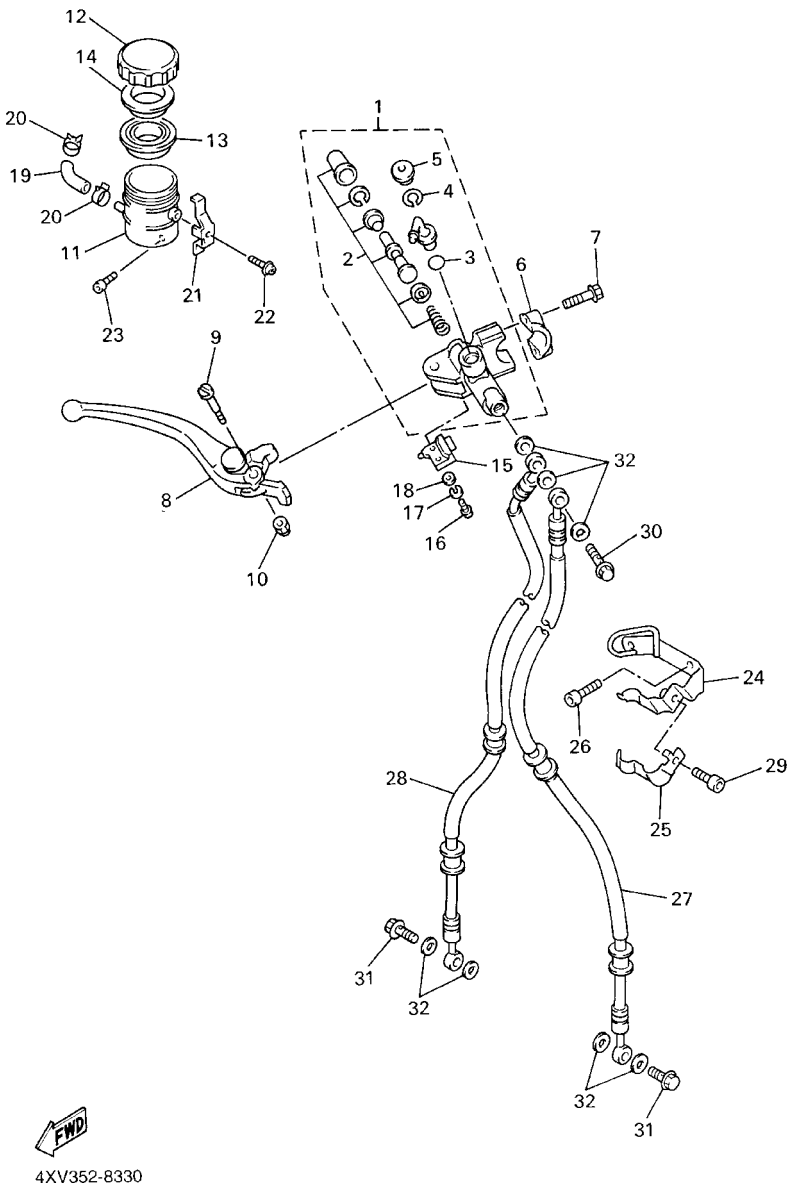


FIG. 34 FRONT MASTER CYLINDER

| REF. NO. | PART NO. | DESCRIPTION | 5JJ4 | 5JJ5 | 5JJ6 | 5JJ3 | | REMARKS |
|---|---|---|---|---|---|---|---|---|
| 1 | 5JJ–W2587–00 | MASTER CYLINDER SUB ASSY | 1 | 1 | 1 | 1 | | |
| 2 | 5JJ–W0041–00 | .CYLINDER KIT, MASTER | 1 | 1 | 1 | 1 | | |
| 3 | 93210–15620 | .O–RING | 1 | 1 | 1 | 1 | | |
| 4 | 2VN–25866–00 | .CIRCLIP | 1 | 1 | 1 | 1 | | |
| 5 | 3FV–2589A–00 | .COVER, DUST | 1 | 1 | 1 | 1 | | |
| 6 | 56A–25867–00 | BRACKET, MASTER CYLINDER | 1 | 1 | 1 | 1 | | |
| 7 | 5EB–26332–00 | BOLT | 2 | 2 | 2 | 2 | | |
| 8 | 4XV–83922–01 | LEVER 2 | 1 | 1 | 1 | 1 | | |
| 9 | 3FV–2589F–00 | BOLT, LEVER | 1 | 1 | 1 | 1 | | |
| 10 | 95606–06100 | NUT, U | 1 | 1 | 1 | 1 | | |
| 11 | 5JJ–25894–10 | TANK, RESERVOIR | 1 | 1 | 1 | 1 | | |
| 12 | 3GM–25852–50 | CAP, RESERVOIR | 1 | 1 | 1 | 1 | | |
| 13 | 3FV–25854–00 | DIAPHRAGM, RESERVOIR | 1 | 1 | 1 | 1 | | |
| 14 | 2J2–25855–50 | BUSH,DIAPHRAGM | 1 | 1 | 1 | 1 | | |
| 15 | 3FV–83980–00 | FRONT STOP SWITCH ASSY | 1 | 1 | 1 | 1 | | |
| 16 | 98502–04012 | SCREW, PAN HEAD | 1 | 1 | 1 | 1 | | |
| 17 | 92902–04100 | WASHER, SPRING | 1 | 1 | 1 | 1 | | |
| 18 | 92902–04600 | WASHER, PLATE | 1 | 1 | 1 | 1 | | |
| 19 | 3TJ–2582F–01 | HOSE | 1 | 1 | 1 | 1 | | |
| 20 | 3PA–24356–00 | CLIP, PIPE 1 | 2 | 2 | 2 | 2 | | |
| 21 | 3FV–2589G–00 | HOLDER | 1 | 1 | 1 | 1 | | |
| 22 | 3GM–2589H–00 | SCREW | 1 | 1 | 1 | 1 | | |
| 23 | 91317–06012 | BOLT | 1 | 1 | 1 | 1 | | |
| 24 | 4XV–25887–00 | HOLDER, BRAKE HOSE | 1 | 1 | 1 | 1 | | |
| 25 | 4XV–2587A–00 | HOLDER, BREAK HOSE | 1 | 1 | 1 | 1 | | |
| 26 | 91317–06012 | BOLT | 2 | 2 | 2 | 2 | | |
| 27 | 4XV–25872–00 | HOSE, BRAKE 1 | 1 | 1 | 1 | 1 | | |

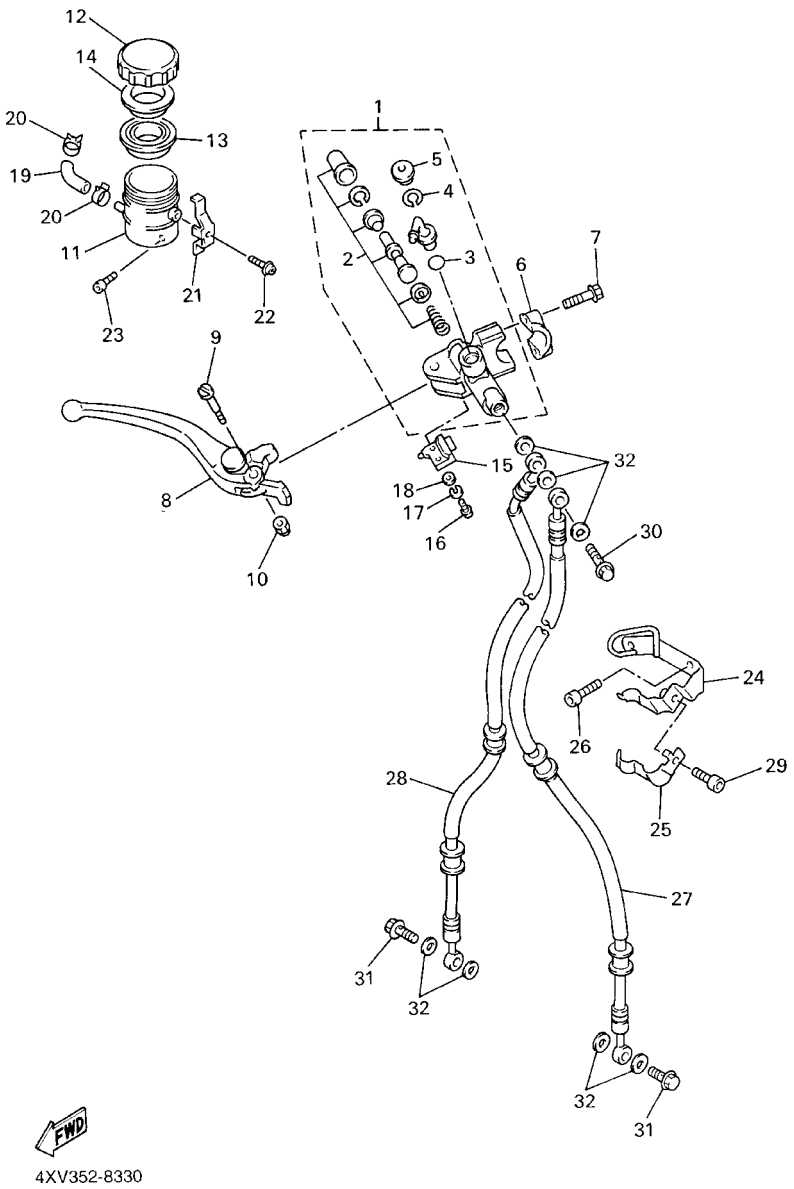


FIG. 34 FRONT MASTER CYLINDER

| REF. NO. | PART NO. | DESCRIPTION | 5JJ4 | 5JJ5 | 5JJ6 | 5JJ3 | | REMARKS |
|---|---|---|---|---|---|---|---|---|
| 28 | 4XV–25873–00 | HOSE, BRAKE 2 | 1 | 1 | 1 | 1 | | |
| 29 | 91317–06010 | BOLT | 1 | 1 | 1 | 1 | | |
| 30 | 90401–10160 | BOLT, UNION | 1 | 1 | 1 | 1 | | |
| 31 | 90401–10172 | BOLT, UNION | 2 | 2 | 2 | 2 | | |
| 32 | 90201–10118 | WASHER, PLATE | 7 | 7 | 7 | 7 | | |

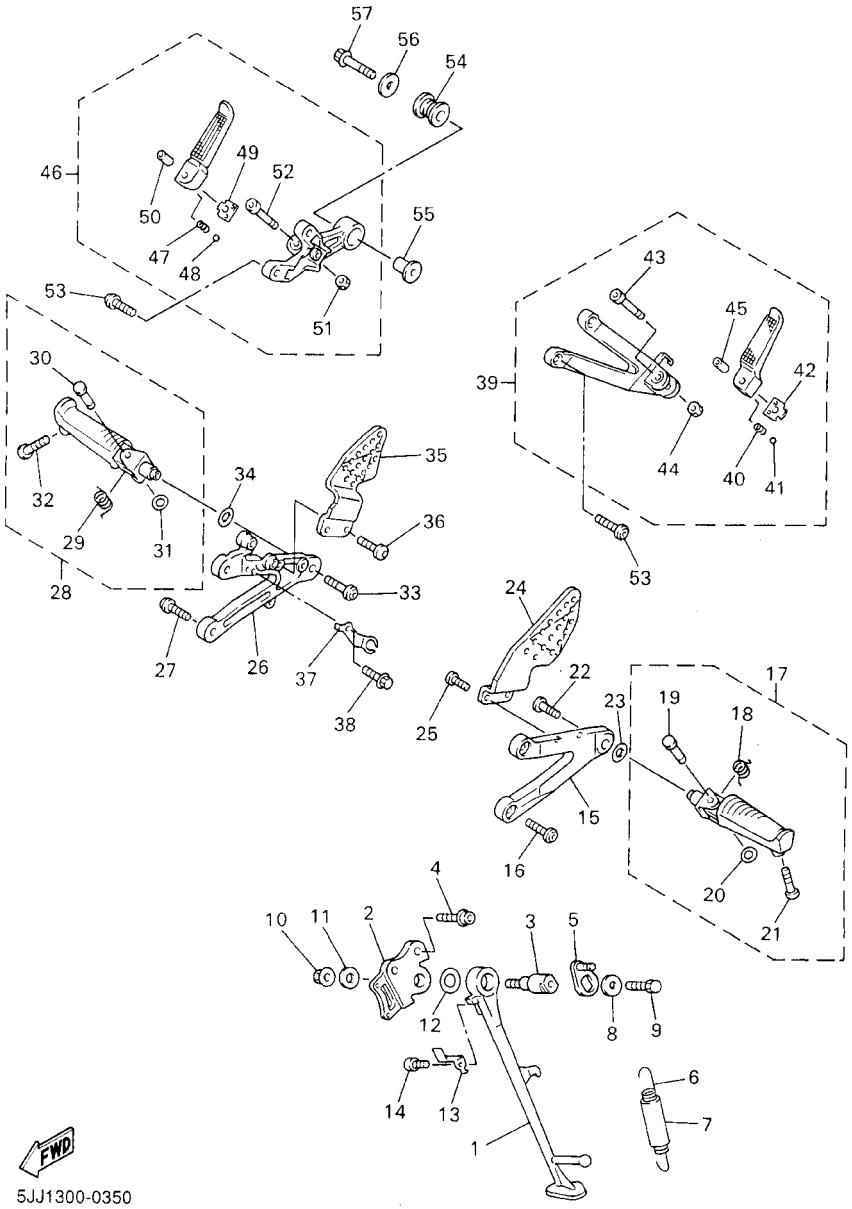


FIG. 35 STAND. FOOTREST

| REF. NO. | PART NO. | DESCRIPTION | 5JJ4 | 5JJ5 | 5JJ6 | 5JJ3 | | REMARKS |
|---|---|---|---|---|---|---|---|---|
| 1 | 4XV–27311–00 | STAND, SIDE | 1 | 1 | 1 | 1 | | |
| 2 | 5JJ–27321–00 | BRACKET, SIDE STAND | 1 | 1 | 1 | 1 | | |
| 3 | 4NX–27351–00 | GUIDE, SIDE STAND | 1 | 1 | 1 | 1 | | |
| 4 | 90109–10002 | BOLT | 2 | 2 | 2 | 2 | | |
| 5 | 5EB–27352–00 | HOOK, SIDE STAND | 1 | 1 | 1 | 1 | | |
| 6 | 90506–18003 | SPRING, TENSION | 1 | 1 | 1 | 1 | | |
| 7 | 90445–19002 | HOSE | 1 | 1 | 1 | 1 | | |
| 8 | 90201–081R9 | WASHER, PLATE | 1 | 1 | 1 | 1 | | |
| 9 | 90101–08662 | BOLT | 1 | 1 | 1 | 1 | | |
| 10 | 95607–10200 | NUT, SELF–LOCKING | 1 | 1 | 1 | 1 | | |
| 11 | 90201–101J1 | WASHER, PLATE | 1 | 1 | 1 | 1 | | |
| 12 | 90201–146F9 | WASHER, PLATE | 1 | 1 | 1 | 1 | | |
| 13 | 5JJ–27315–00 | LINK, SIDE STAND | 1 | 1 | 1 | 1 | | |
| 14 | 90110–06226 | BOLT, HEXAGON SOCKET HEAD | 1 | 1 | 1 | 1 | | |
| 15 | 5JJ–27442–00 | BRACKET 2 | 1 | 1 | 1 | 1 | | |
| 16 | 90109–085G6 | BOLT | 2 | 2 | 2 | 2 | | |
| 17 | 5JJ–27410–00 | FRONT FOOTREST ASSY (LEFT) | 1 | 1 | 1 | 1 | | |
| 18 | 90508–18134 | .SPRING, TORSION | 1 | 1 | 1 | 1 | | |
| 19 | 90243–08029 | .PIN | 1 | 1 | 1 | 1 | | |
| 20 | 90201–06042 | .WASHER, PLATE | 1 | 1 | 1 | 1 | | |
| 21 | 90109–083E0 | .BOLT | 1 | 1 | 1 | 1 | | |
| 22 | 90149–08296 | SCREW | 1 | 1 | 1 | 1 | | |
| 23 | 90201–13008 | WASHER, PLATE | 1 | 1 | 1 | 1 | | |
| 24 | 5JJ–27445–00 | PLATE 1 | 1 | 1 | 1 | 1 | | |
| 25 | 90149–06233 | SCREW | 2 | 2 | 2 | 2 | | |
| 26 | 5JJ–27443–00 | BRACKET 3 | 1 | 1 | 1 | 1 | | |
| 27 | 90109–085G6 | BOLT | 2 | 2 | 2 | 2 | | |

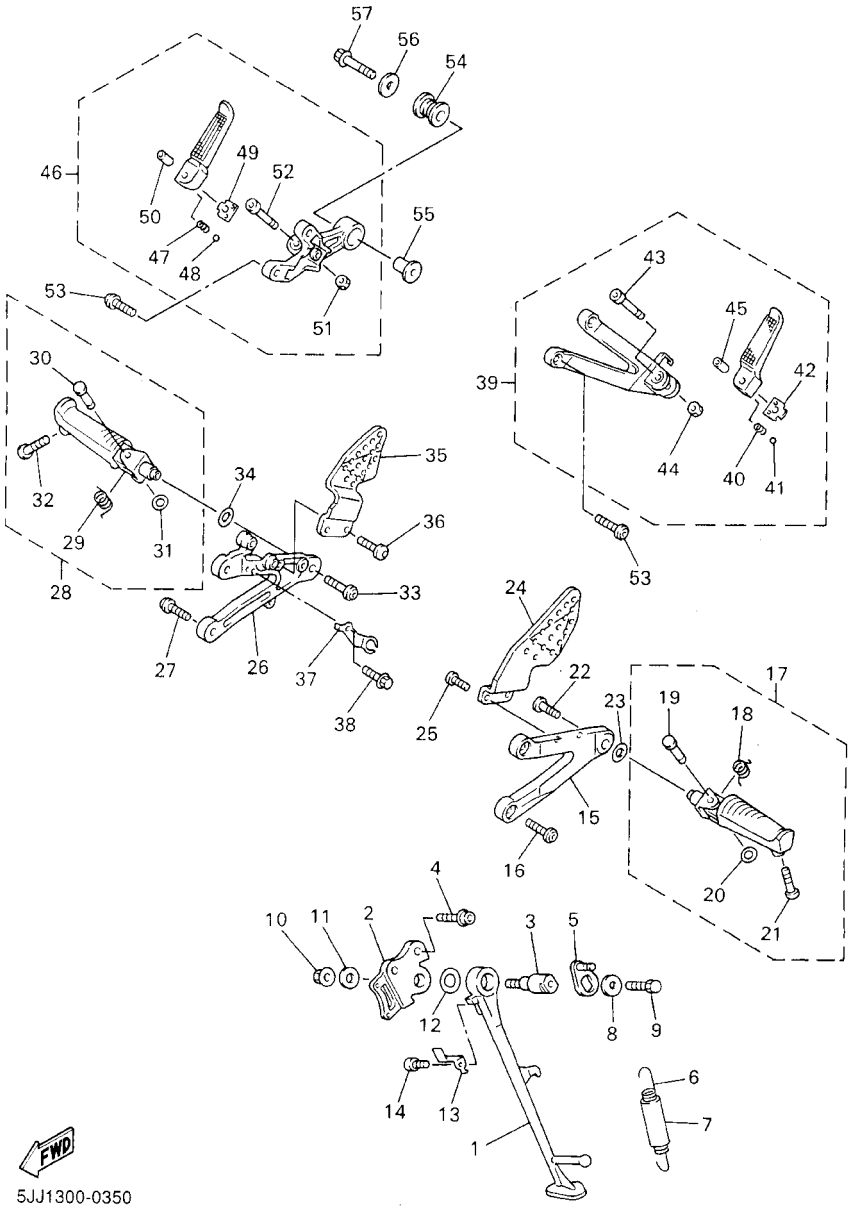


FIG. 35 STAND. FOOTREST

| REF. NO. | PART NO. | DESCRIPTION | 5JJ4 | 5JJ5 | 5JJ6 | 5JJ3 | | REMARKS |
|---|---|---|---|---|---|---|---|---|
| 28 | 5JJ–27420–00 | FRONT FOOTREST ASSY (RIGHT) | 1 | 1 | 1 | 1 | | |
| 29 | 90508–18135 | .SPRING, TORSION | 1 | 1 | 1 | 1 | | |
| 30 | 90243–08029 | .PIN | 1 | 1 | 1 | 1 | | |
| 31 | 90201–06042 | .WASHER, PLATE | 1 | 1 | 1 | 1 | | |
| 32 | 90109–083E0 | .BOLT | 1 | 1 | 1 | 1 | | |
| 33 | 90149–08296 | SCREW | 1 | 1 | 1 | 1 | | |
| 34 | 90201–13008 | WASHER, PLATE | 1 | 1 | 1 | 1 | | |
| 35 | 5JJ–27446–00 | PLATE 2 | 1 | 1 | 1 | 1 | | |
| 36 | 90149–06233 | SCREW | 2 | 2 | 2 | 2 | | |
| 37 | 3XV–2144G–00 | STAY, STOP SWITCH | 1 | 1 | 1 | 1 | | |
| 38 | 95807–06008 | BOLT, FLANGE | 1 | 1 | 1 | 1 | | |
| 39 | 5JJ–27430–00 | REAR FOOTREST ASSY 1 | 1 | 1 | 1 | 1 | | |
| 40 | 90501–12743 | .SPRING, COMPRESSION | 1 | 1 | 1 | 1 | | |
| 41 | 93501–04011 | .BALL | 1 | 1 | 1 | 1 | | |
| 42 | 5JJ–27437–00 | .WASHER, SPECIAL | 1 | 1 | 1 | 1 | | |
| 43 | 91314–06035 | .BOLT | 1 | 1 | 1 | 1 | | |
| 44 | 95604–06200 | .NUT, U FLANGE | 1 | 1 | 1 | 1 | | |
| 45 | 90387–06697 | .COLLAR | 1 | 1 | 1 | 1 | | |
| 46 | 5JJ–27440–00 | REAR FOOTREST ASSY 2 | 1 | 1 | 1 | 1 | | |
| 47 | 90501–12743 | .SPRING, COMPRESSION | 1 | 1 | 1 | 1 | | |
| 48 | 93501–04011 | .BALL | 1 | 1 | 1 | 1 | | |
| 49 | 5JJ–27437–00 | .WASHER, SPECIAL | 1 | 1 | 1 | 1 | | |
| 50 | 90387–06697 | .COLLAR | 1 | 1 | 1 | 1 | | |
| 51 | 95604–06200 | .NUT, U FLANGE | 1 | 1 | 1 | 1 | | |
| 52 | 91314–06035 | .BOLT | 1 | 1 | 1 | 1 | | |
| 53 | 90109–085G6 | BOLT | 4 | 4 | 4 | 4 | | |
| 54 | 36Y–27424–00 | DAMPER, FOOTREST 2 | 1 | 1 | 1 | 1 | | |

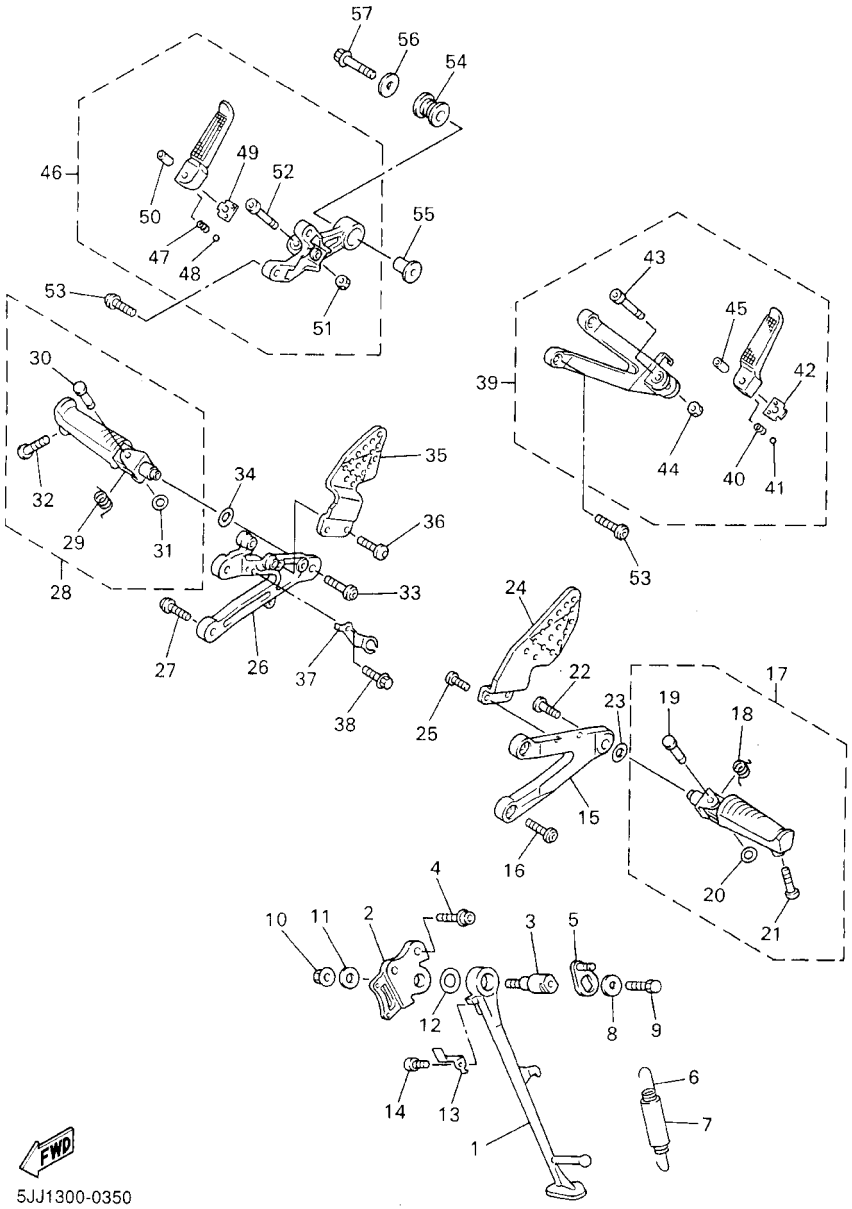


FIG. 35 STAND. FOOTREST

| REF. NO. | PART NO. | DESCRIPTION | 5JJ4 | 5JJ5 | 5JJ6 | 5JJ3 | | REMARKS |
|---|---|---|---|---|---|---|---|---|
| 55 | 90387–10001 | COLLAR | 1 | 1 | 1 | 1 | | |
| 56 | 90201–10669 | WASHER, PLATE | 1 | 1 | 1 | 1 | | |
| 57 | 90105–10022 | BOLT, WASHER BASED | 1 | 1 | 1 | 1 | | |

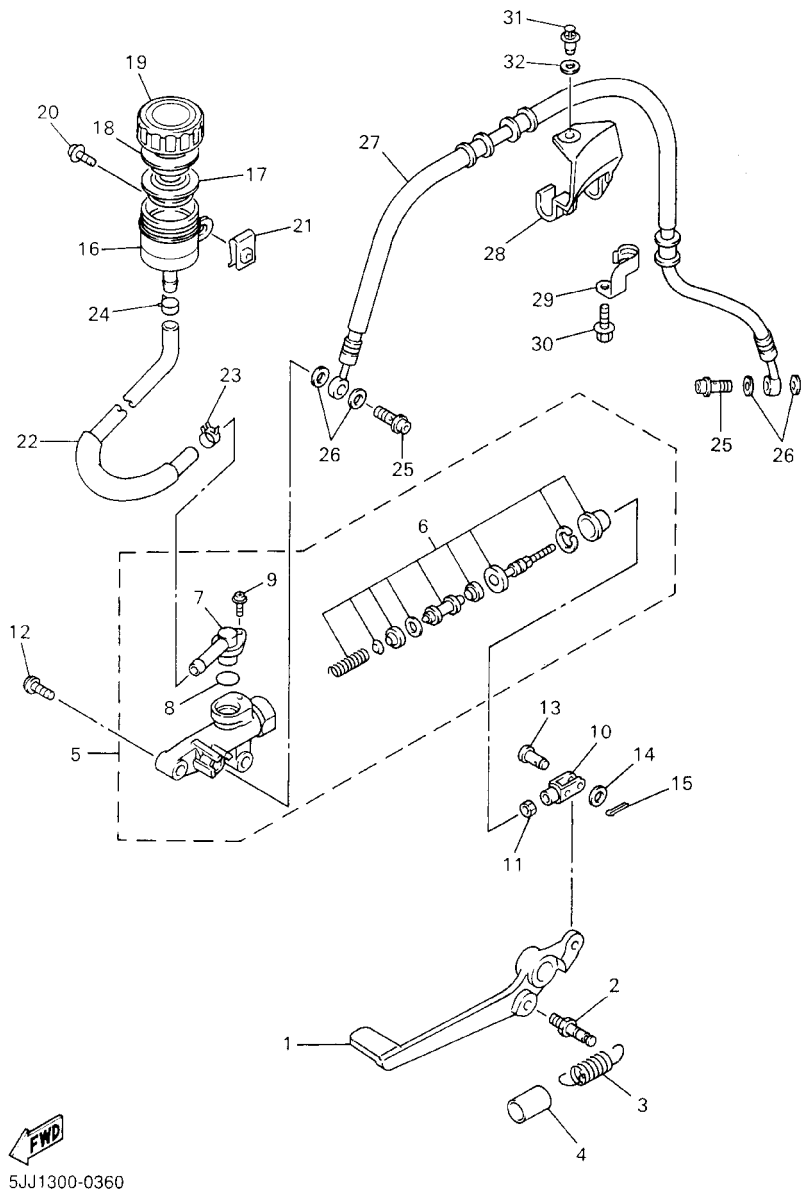


FIG. 36 REAR MASTER CYLINDER

| REF. NO. | PART NO. | DESCRIPTION | 5JJ4 | 5JJ5 | 5JJ6 | 5JJ3 | | REMARKS |
|---|---|---|---|---|---|---|---|---|
| 1 | 5JJ–27211–00 | PEDAL, BRAKE | 1 | 1 | 1 | 1 | | |
| 2 | 5JJ–27813–00 | PIN, PEDAL CRANK | 1 | 1 | 1 | 1 | | |
| 3 | 90506–20377 | SPRING, TENSION | 1 | 1 | 1 | 1 | | |
| 4 | 90446–17346 | HOSE | 1 | 1 | 1 | 1 | | |
| 5 | 3TU–2583V–01 | RR. MASTER CYLINDER ASSY. | 1 | 1 | 1 | 1 | | |
| 6 | 3TU–W0042–51 | .CYLINDER KIT, MASTER | 1 | 1 | 1 | 1 | | |
| 7 | 3LN–2582A–00 | .JOINT | 1 | 1 | 1 | 1 | | |
| 8 | 3LN–2585F–00 | .O–RING | 1 | 1 | 1 | 1 | | |
| 9 | 3LN–2585H–00 | .SCREW,SET | 1 | 1 | 1 | 1 | | |
| 10 | 4XV–27222–01 | JOINT | 1 | 1 | 1 | 1 | | |
| 11 | 95304–08700 | NUT | 1 | 1 | 1 | 1 | | |
| 12 | 90109–06013 | BOLT | 2 | 2 | 2 | 2 | | |
| 13 | 91701–06018 | PIN, CLEVIS | 1 | 1 | 1 | 1 | | |
| 14 | 92907–06200 | WASHER | 1 | 1 | 1 | 1 | | |
| 15 | 91401–16012 | PIN, COTTER | 1 | 1 | 1 | 1 | | |
| 16 | 5JJ–25894–00 | TANK, RESERVOIR | 1 | 1 | 1 | 1 | | |
| 17 | 2VN–25854–00 | DIAPHRAGM, RESERVOIR | 1 | 1 | 1 | 1 | | |
| 18 | 2VN–25855–00 | BUSH,DIAPHRAGM | 1 | 1 | 1 | 1 | | |
| 19 | 3XP–25852–50 | CAP, RESERVOIR | 1 | 1 | 1 | 1 | | |
| 20 | 90159–06056 | SCREW, WITH WASHER | 1 | 1 | 1 | 1 | | |
| 21 | 90183–06053 | NUT, SPRING | 1 | 1 | 1 | 1 | | |
| 22 | 5JJ–25895–00 | HOSE, RESERVOIR | 1 | 1 | 1 | 1 | | |
| 23 | 90467–14057 | CLIP | 1 | 1 | 1 | 1 | | |
| 24 | 90467–12191 | CLIP | 1 | 1 | 1 | 1 | | |
| 25 | 90401–10172 | BOLT, UNION | 2 | 2 | 2 | 2 | | |
| 26 | 90201–10118 | WASHER, PLATE | 4 | 4 | 4 | 4 | | |
| 27 | 4XV–25874–00 | HOSE, BRAKE | 1 | 1 | 1 | 1 | | |

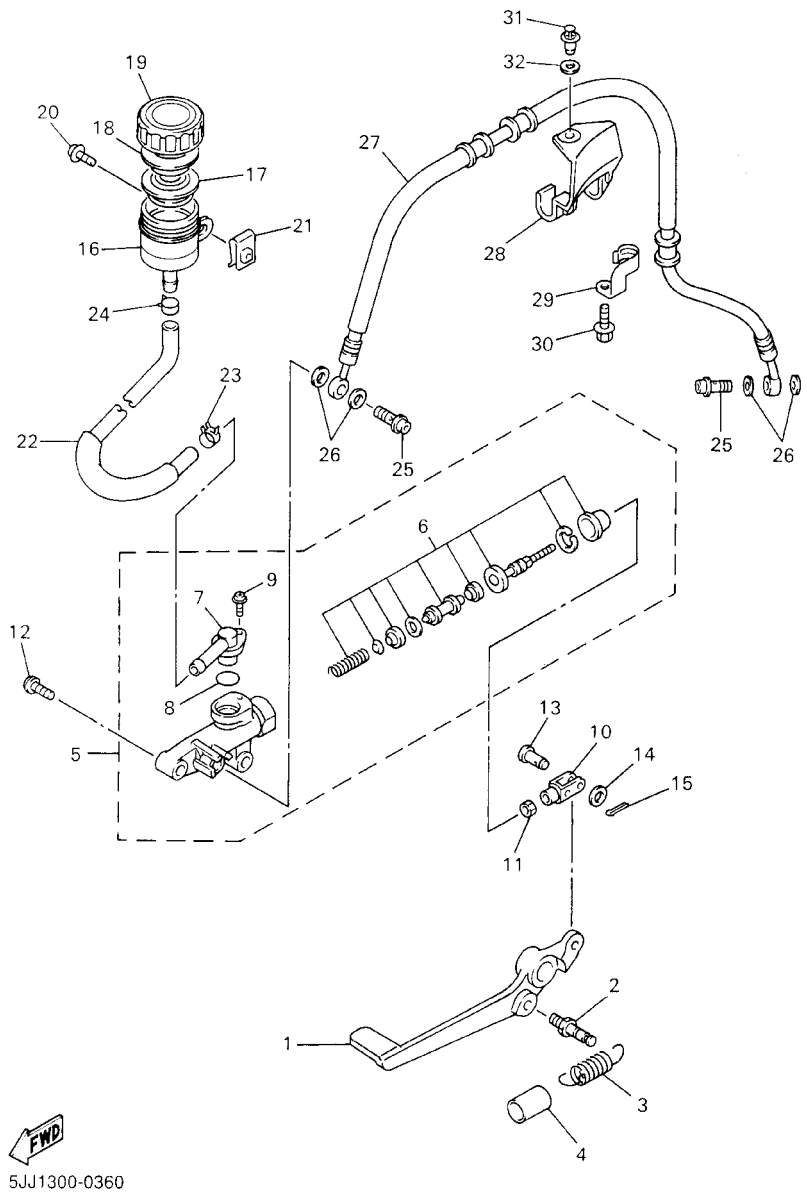


FIG. 36 REAR MASTER CYLINDER

| REF. NO. | PART NO. | DESCRIPTION | 5JJ4 | 5JJ5 | 5JJ6 | 5JJ3 | | REMARKS |
|---|---|---|---|---|---|---|---|---|
| 28 | 4XV–25886–01 | HOLDER, BRAKE HOSE | 1 | 1 | 1 | 1 | | |
| 29 | 4FM–25876–00 | HOLDER, BRAKE HOSE 2 | 1 | 1 | 1 | 1 | | |
| 30 | 95027–06010 | BOLT, FLANGE | 1 | 1 | 1 | 1 | | |
| 31 | 90269–08001 | RIVET | 1 | 1 | 1 | 1 | | |
| 32 | 5JJ–22332–00 | DAMPER, CHAIN CASE | 1 | 1 | 1 | 1 | | |

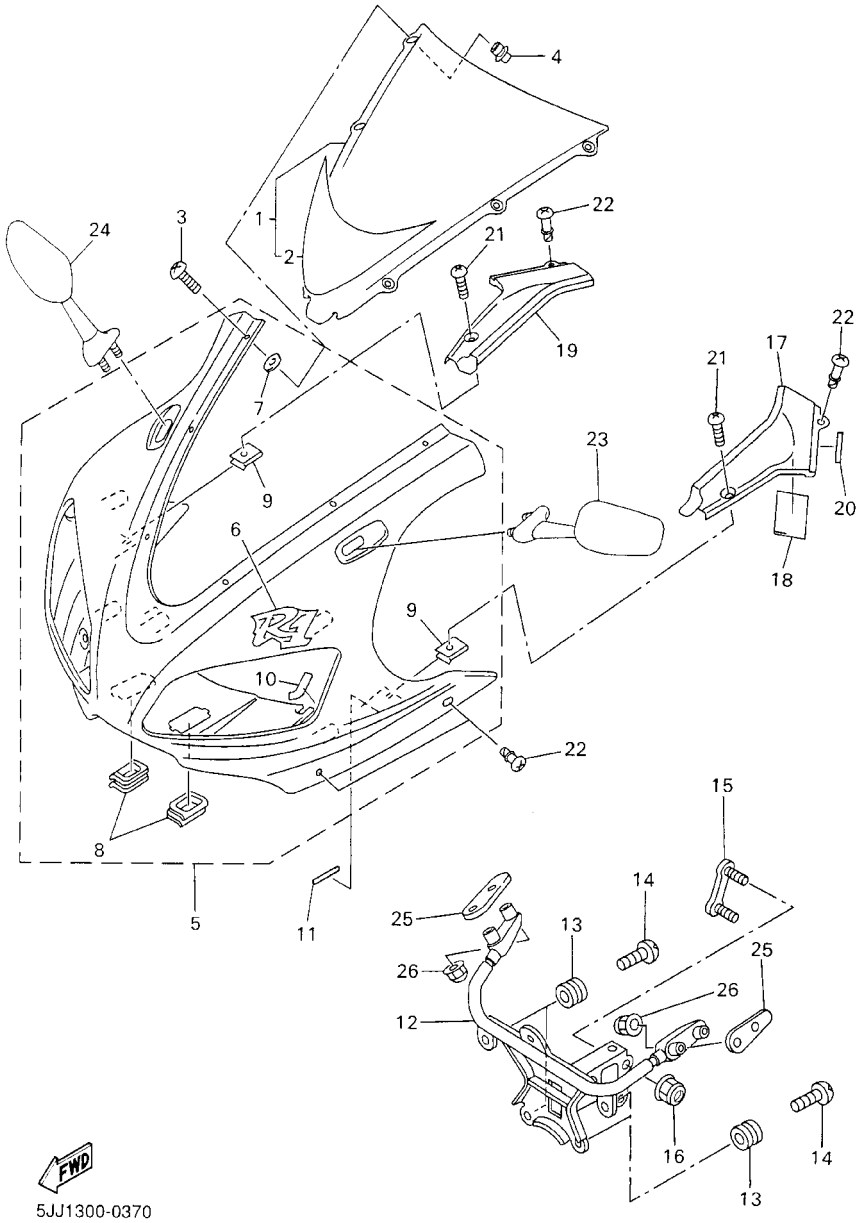


FIG. 37 COWLING 1

| REF. NO. | PART NO. | DESCRIPTION | 5JJ4 | 5JJ5 | 5JJ6 | 5JJ3 | | REMARKS |
|---|---|---|---|---|---|---|---|---|
| 1 | 5JJ–Y2881–30 | WINDSHIELD | 1 | 1 | 1 | 1 | | |
| 2 | 5JJ–2832P–01 | .GRAPHIC 18 | 1 | 1 | 1 | 1 | | |
| 3 | 90150–05023 | SCREW, ROUND HEAD | 6 | 6 | 6 | 6 | | |
| 4 | 90179–05523 | NUT | 6 | 6 | 6 | 6 | | |
| 5 | 5JJ–Y283G–10–0X | BODY, FRONT UPPER 1 | 1 | 1 | 1 | 1 | | UR VRC1/BL2 |
| | 5JJ–Y283G–00–1X | BODY, FRONT UPPER 1 | 1 | 1 | 1 | 1 | | UR DPBMC |
| 6 | 4XV–28315–20 | .EMBLEM | 1 | 1 | 1 | 1 | | UR FOR VRC1 |
| | 4XV–28315–30 | .EMBLEM | 1 | 1 | 1 | 1 | | UR FOR DPBMC |
| 7 | 5JJ–2834W–00 | .PROTECTOR 2 | 6 | 6 | 6 | 6 | | |
| 8 | 4XV–28349–00 | .CAP | 2 | 2 | 2 | 2 | | |
| 9 | 90183–05074 | .NUT, SPRING | 2 | 2 | 2 | 2 | | |
| 10 | 1LJ–2414J–00 | DAMPER, PLATE 2 | 2 | 2 | 2 | 2 | | |
| 11 | 4XV–2834E–00 | DAMPER | 2 | 2 | 2 | 2 | | |
| 12 | 5JJ–28356–01 | STAY 1 | 1 | 1 | 1 | 1 | | |
| 13 | 4XV–83513–00 | DAMPER | 4 | 4 | 4 | 4 | | |
| 14 | 90164–05014 | SCREW, TAPPING | 4 | 4 | 4 | 4 | | |
| 15 | 4XV–28336–00 | PLATE | 1 | 1 | 1 | 1 | | |
| 16 | 95607–08200 | NUT, SELF–LOCKING | 2 | 2 | 2 | 2 | | |
| 17 | 4XV–2837L–00 | PANEL, CONSOLE 1 | 1 | 1 | 1 | 1 | | |
| 18 | 1TX–28371–00 | DAMPER | 1 | 1 | 1 | 1 | | |
| 19 | 4XV–2837M–00 | PANEL, CONSOLE 2 | 1 | 1 | 1 | 1 | | |
| 20 | 4EU–24141–00 | PROTECTOR, FUEL TANK | 2 | 2 | 2 | 2 | | |
| 21 | 90154–05013 | SCREW, BINDING | 2 | 2 | 2 | 2 | | |
| 22 | 3XV–28386–00 | HEAD | 6 | 6 | 6 | 6 | | |
| 23 | 5JJ–26280–00 | REAR VIEW MIRROR ASSY(LEFT) | 1 | 1 | 1 | 1 | | |
| 24 | 5JJ–26290–00 | REAR VIEW MIRROR ASSY(RIGHT) | 1 | 1 | 1 | 1 | | |
| 25 | 4SV–26298–00 | PLATE, MIRROR FITTING 1 | 2 | 2 | 2 | 2 | | |

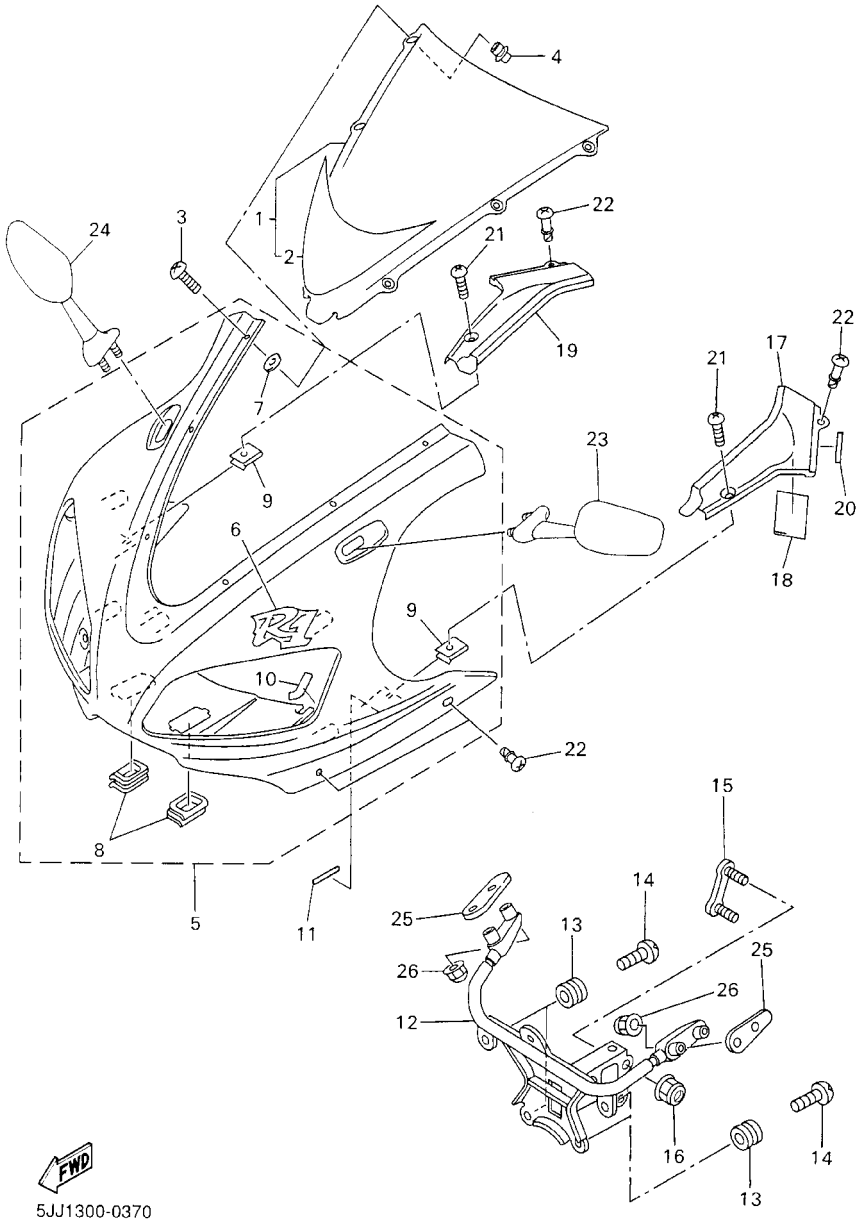


FIG. 37 COWLING 1

| REF. NO. | PART NO. | DESCRIPTION | 5JJ4 | 5JJ5 | 5JJ6 | 5JJ3 | | REMARKS |
|---|---|---|---|---|---|---|---|---|
| 26 | 90176–06055 | NUT, CROWN | 4 | 4 | 4 | 4 | | |

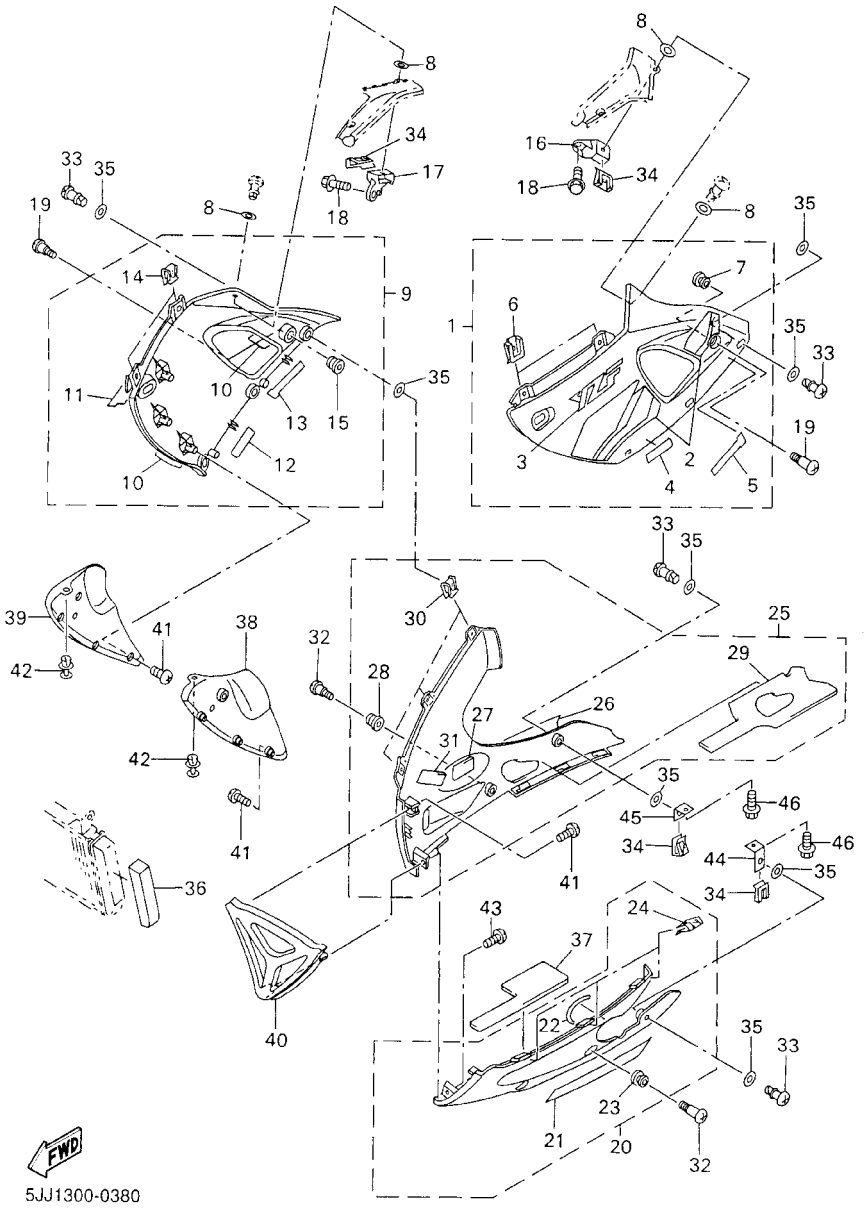


FIG. 38 COWLING 2

| REF. NO. | PART NO. | DESCRIPTION | 5JJ4 | 5JJ5 | 5JJ6 | 5JJ3 | | REMARKS |
|---|---|---|---|---|---|---|---|---|
| 1 | 4XV–Y283U–50–1X | PANEL ASSEMBLY 1 | 1 | 1 | 1 | 1 | | UR VRC1/BWC1 |
| | 4XV–Y283U–40–P1 | PANEL ASSEMBLY 1 | 1 | 1 | 1 | 1 | | UR DPBMC |
| 2 | 5JJ–28301–00 | .GRAPHIC SET, LOWER COVER 1 | 1 | 1 | 1 | 1 | | UR FOR VRC1 |
| | 5JJ–28301–10 | .GRAPHIC SET, LOWER COVER 1 | 1 | 1 | 1 | 1 | | UR FOR DPBMC |
| 3 | 4XV–2839H–50 | .EMBLEM 1 | 1 | 1 | 1 | 1 | | UR FOR VRC1 |
| | 4XV–2839H–60 | .EMBLEM 1 | 1 | 1 | 1 | 1 | | UR FOR DPBMC |
| 4 | 4XV–28338–20 | .EMBLEM | 1 | 1 | 1 | 1 | | UR FOR VRC1 |
| | 4XV–28338–40 | .EMBLEM | 1 | 1 | 1 | 1 | | UR FOR DPBMC |
| 5 | 4XV–28328–20 | .EMBLEM | 1 | 1 | 1 | 1 | | UR FOR VRC1 |
| | 4XV–28328–50 | .EMBLEM | 1 | 1 | 1 | 1 | | UR FOR DPBMC |
| 6 | 4XV–2177L–00 | .PLATE, SPRING | 2 | 2 | 2 | 2 | | |
| 7 | 90480–13398 | .GROMMET | 1 | 1 | 1 | 1 | | |
| 8 | 2TK–21757–00 | WASHER, SPECIAL 1 | 12 | 12 | 12 | 12 | | |
| 9 | 4XV–Y283V–50–1X | PANEL ASSEMBLY 2 | 1 | 1 | 1 | 1 | | UR VRC1/BWC1 |
| | 4XV–Y283V–40–P1 | PANEL ASSEMBLY 2 | 1 | 1 | 1 | 1 | | UR DPBMC |
| 10 | 5JJ–28303–00 | .GRAPHIC SET, LOWER COVER 2 | 1 | 1 | 1 | 1 | | UR FOR VRC1 |
| | 5JJ–28303–10 | .GRAPHIC SET, LOWER COVER 2 | 1 | 1 | 1 | 1 | | UR FOR DPBMC |
| 11 | 4XV–2839H–50 | .EMBLEM 1 | 1 | 1 | 1 | 1 | | UR FOR VRC1 |
| | 4XV–2839H–60 | .EMBLEM 1 | 1 | 1 | 1 | 1 | | UR FOR DPBMC |
| 12 | 4XV–28338–20 | .EMBLEM | 1 | 1 | 1 | 1 | | UR FOR VRC1 |
| | 4XV–28338–40 | .EMBLEM | 1 | 1 | 1 | 1 | | UR FOR DPBMC |
| 13 | 4XV–28328–20 | .EMBLEM | 1 | 1 | 1 | 1 | | UR FOR VRC1 |
| | 4XV–28328–50 | .EMBLEM | 1 | 1 | 1 | 1 | | UR FOR DPBMC |
| 14 | 4XV–2177L–00 | .PLATE, SPRING | 2 | 2 | 2 | 2 | | |
| 15 | 90480–13398 | .GROMMET | 1 | 1 | 1 | 1 | | |
| 16 | 4XV–2836A–00 | BRACKET 1 | 1 | 1 | 1 | 1 | | |
| 17 | 4XV–2836E–00 | BRACKET 2 | 1 | 1 | 1 | 1 | | |

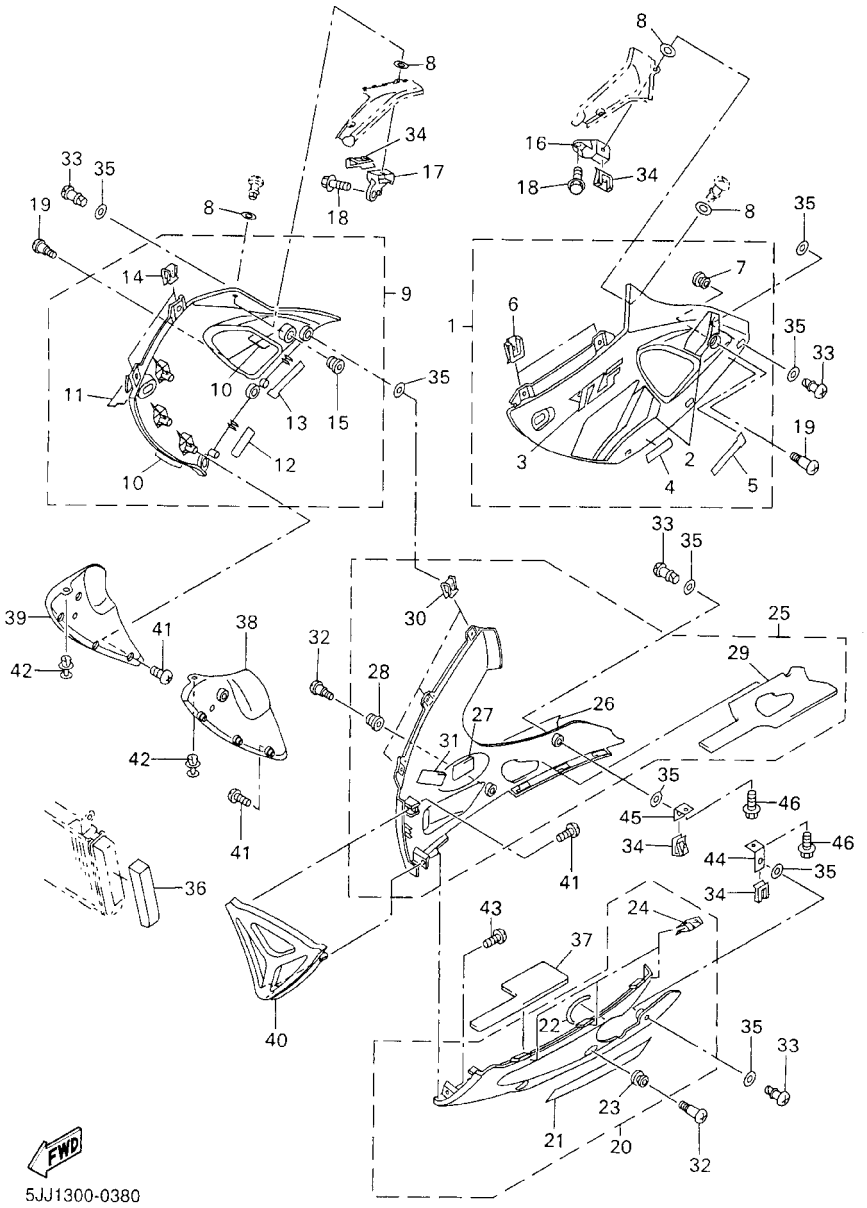


FIG. 38 COWLING 2

| REF. NO. | PART NO. | DESCRIPTION | 5JJ4 | 5JJ5 | 5JJ6 | 5JJ3 | | REMARKS |
|---|---|---|---|---|---|---|---|---|
| 18 | 90119–06052 | BOLT, WITH WASHER | 2 | 2 | 2 | 2 | | |
| 19 | 90150–06036 | SCREW, ROUND HEAD | 2 | 2 | 2 | 2 | | |
| 20 | 5JJ–Y2808–00–4B | COVER ASSY, UNDER | 1 | 1 | 1 | 1 | | BL2 FOR VRC1 |
| | 5JJ–Y2808–00–P0 | COVER ASSY, UNDER | 1 | 1 | 1 | 1 | | DPBMC |
| 21 | 99241–00320 | .EMBLEM, YAMAHA | 1 | 1 | 1 | 1 | | |
| 22 | 4BR–2834E–00 | .DAMPER | 1 | 1 | 1 | 1 | | |
| 23 | 90480–13398 | .GROMMET | 1 | 1 | 1 | 1 | | |
| 24 | 4XV–2177L–00 | .PLATE, SPRING | 3 | 3 | 3 | 3 | | |
| 25 | 5JJ–Y2809–00–4B | COVER ASSY 2, UNDER | 1 | 1 | 1 | 1 | | BL2 FOR VRC1 |
| | 5JJ–Y2809–00–P0 | COVER ASSY 2, UNDER | 1 | 1 | 1 | 1 | | DPBMC |
| 26 | 5JJ–2153E–00 | .EMBLEM, YAMAHA | 1 | 1 | 1 | 1 | | |
| 27 | 1TX–28371–00 | .DAMPER | 1 | 1 | 1 | 1 | | |
| 28 | 90480–13398 | .GROMMET | 1 | 1 | 1 | 1 | | |
| 29 | 5JJ–2848M–00 | .SEAT 4 | 1 | 1 | 1 | 1 | | |
| 30 | 4XV–2177L–00 | .PLATE, SPRING | 3 | 3 | 3 | 3 | | |
| 31 | 1JK–21735–00 | SEAL 2 | 1 | 1 | 1 | 1 | | |
| 32 | 90150–06036 | SCREW, ROUND HEAD | 2 | 2 | 2 | 2 | | |
| 33 | 3XV–28386–00 | HEAD | 8 | 8 | 8 | 8 | | |
| 34 | 4XV–2177L–00 | PLATE, SPRING | 4 | 4 | 4 | 4 | | |
| 35 | 2TK–21757–00 | WASHER, SPECIAL 1 | 16 | 16 | 16 | 16 | | |
| 36 | 4SV–28371–00 | DAMPER | 1 | 1 | 1 | 1 | | |
| 37 | 5JJ–2848L–00 | SEAT 3 | 1 | 1 | 1 | 1 | | |
| 38 | 4XV–2836K–10 | PANEL, INNER 1 | 1 | 1 | 1 | 1 | | |
| 39 | 4XV–2836L–10 | PANEL, INNER 2 | 1 | 1 | 1 | 1 | | |
| 40 | 4XV–2836M–10 | PANEL, INNER 3 | 1 | 1 | 1 | 1 | | UR FOR VRC1 |
| | 4XV–2836M–10–P0 | PANEL, INNER 3 | 1 | 1 | 1 | 1 | | UR DPBMC |
| 41 | 97704–40012 | SCREW, TAPPING | 8 | 8 | 8 | 8 | | |

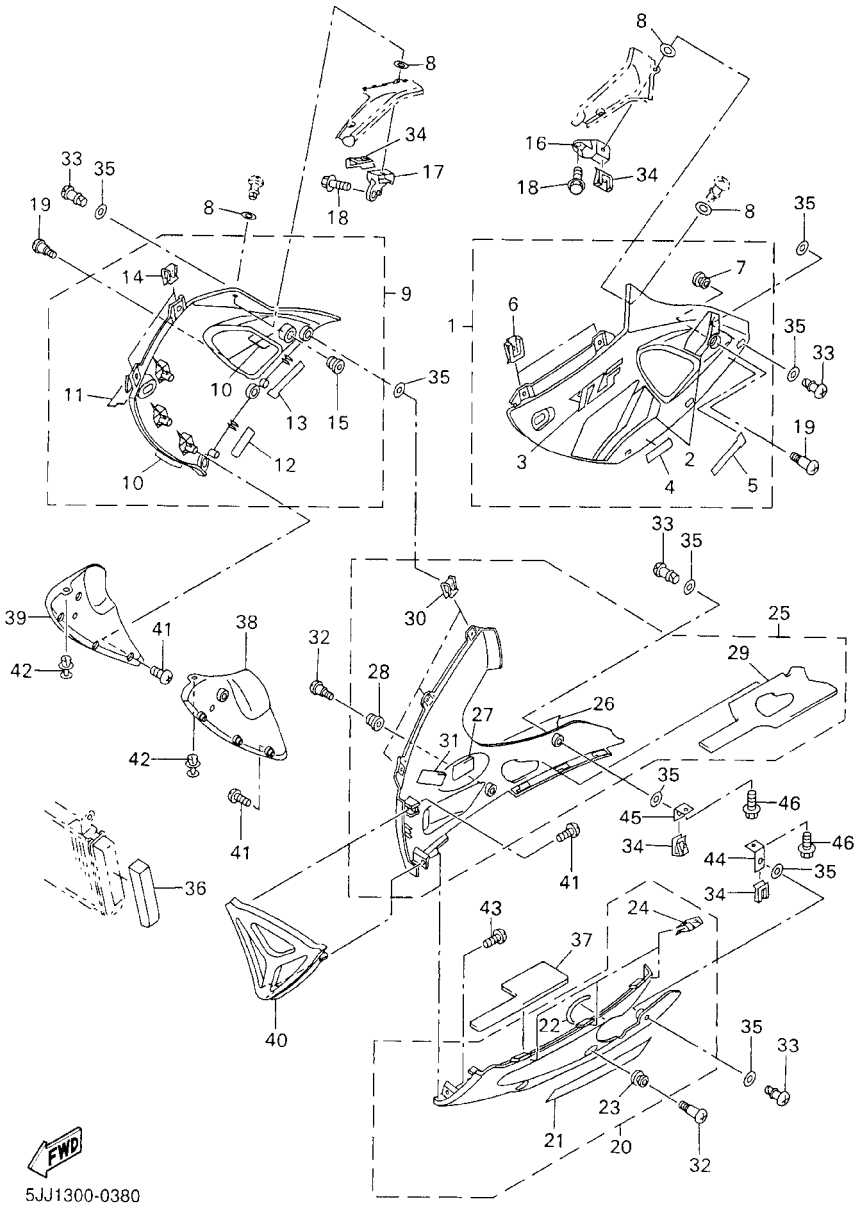


FIG. 38 COWLING 2

| REF. NO. | PART NO. | DESCRIPTION | 5JJ4 | 5JJ5 | 5JJ6 | 5JJ3 | | REMARKS |
|---|---|---|---|---|---|---|---|---|
| 42 | 90269–07077 | RIVET | 2 | 2 | 2 | 2 | | |
| 43 | 97707–50016 | SCREW, TAPPING | 3 | 3 | 3 | 3 | | |
| 44 | 4XV–2836F–00 | BRACKET 3 | 1 | 1 | 1 | 1 | | |
| 45 | 4XV–2836G–00 | BRACKET 4 | 1 | 1 | 1 | 1 | | |
| 46 | 95807–06012 | BOLT, FLANGE | 2 | 2 | 2 | 2 | | |

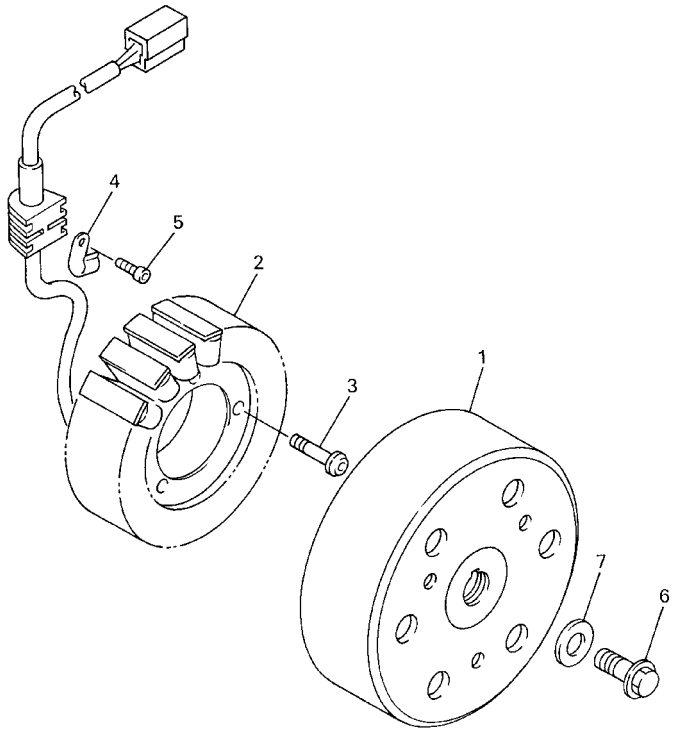

4XV352-8380

FIG. 39 GENERATOR

| REF. NO. | PART NO. | DESCRIPTION | 5JJ4 | 5JJ5 | 5JJ6 | 5JJ3 | | REMARKS |
|---|---|---|---|---|---|---|---|---|
| 1 | 4XV–81450–00 | ROTOR ASSY | 1 | 1 | 1 | 1 | | |
| 2 | 4XV–81410–00 | STATOR ASSY | 1 | 1 | 1 | 1 | | |
| * 3 | 90149–06013 | SCREW | 3 | 3 | 3 | 3 | | |
| 4 | 90462–10182 | CLAMP | 1 | 1 | 1 | 1 | | |
| 5 | 91317–06012 | BOLT | 1 | 1 | 1 | 1 | | |
| 6 | 90105–105A6 | BOLT, WASHER BASED | 1 | 1 | 1 | 1 | | |
| 7 | 90201–103U7 | WASHER, PLATE | 1 | 1 | 1 | 1 | | |

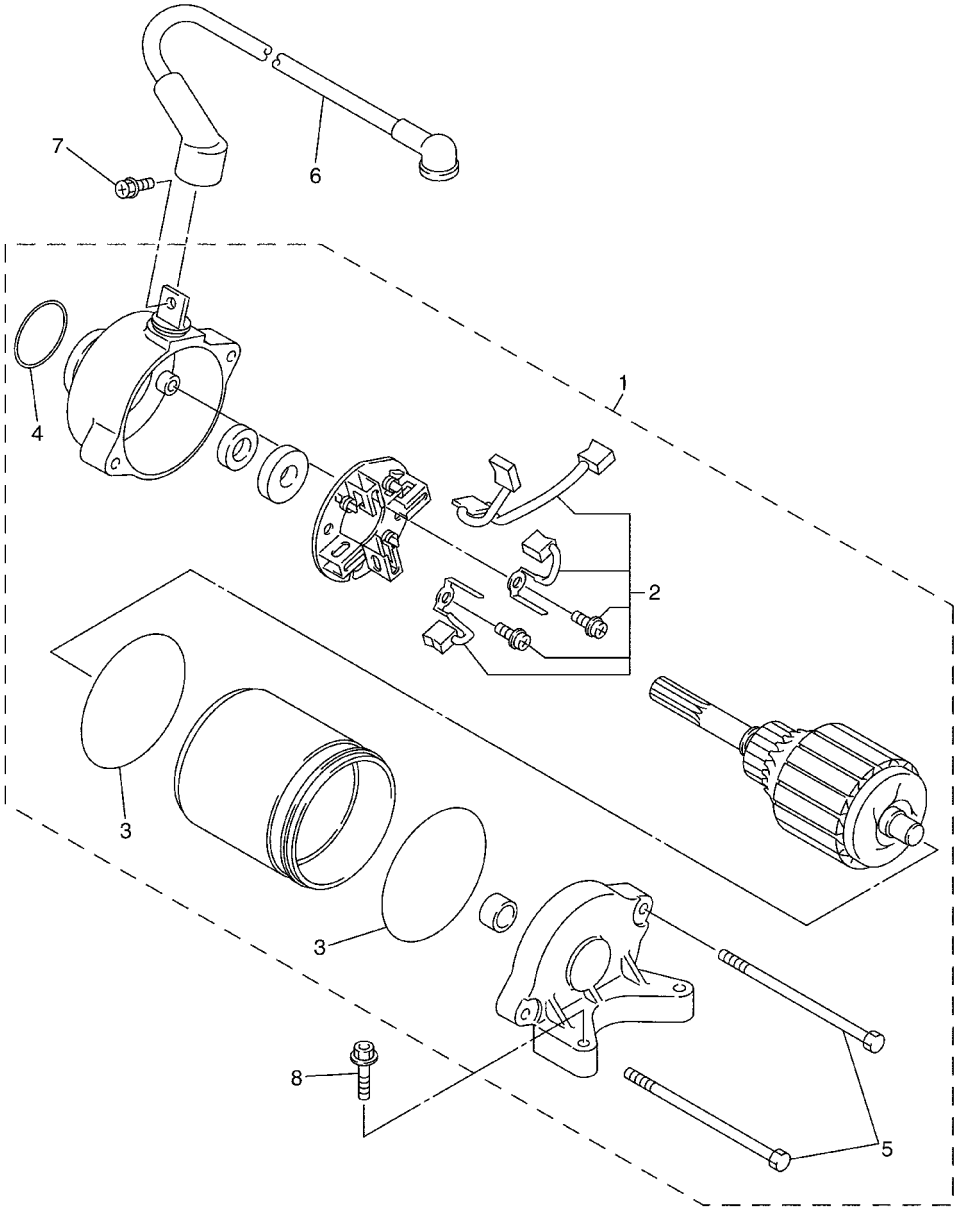


5JJ1300-0400

FIG. 40 STARTING MOTOR

| REF. NO. | PART NO. | DESCRIPTION | 5JJ4 | 5JJ5 | 5JJ6 | 5JJ3 | | REMARKS |
|---|---|---|---|---|---|---|---|---|
| 1 | 5JJ–81890–00 | MOTOR ASSY | 1 | 1 | 1 | 1 | | |
| 2 | 5JJ–81801–00 | .BRUSH SET | 1 | 1 | 1 | 1 | | |
| 3 | 93210–55669 | .O–RING | 2 | 2 | 2 | 2 | | |
| 4 | 93210–25711 | .O–RING | 1 | 1 | 1 | 1 | | |
| 5 | 5JJ–81846–00 | .SCREW | 2 | 2 | 2 | 2 | | |
| 6 | 5JJ–8183G–00 | CORD COMP. | 1 | 1 | 1 | 1 | | |
| 7 | 5JJ–81828–00 | BOLT 2 | 1 | 1 | 1 | 1 | | |
| 8 | 95027–06025 | BOLT, FLANGE | 2 | 2 | 2 | 2 | | |

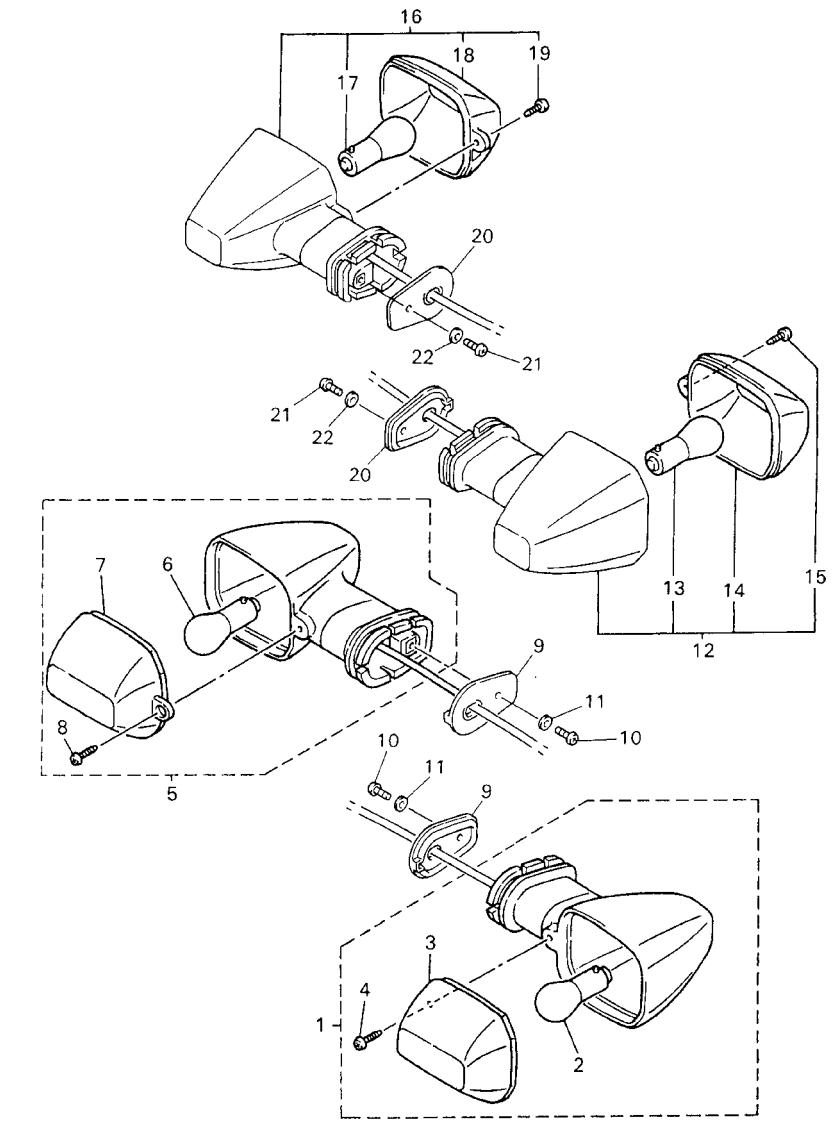


FIG. 41 FLASHER LIGHT

| REF. NO. | PART NO. | DESCRIPTION | 5JJ4 | 5JJ5 | 5JJ6 | 5JJ3 | | REMARKS |
|---|---|---|---|---|---|---|---|---|
| 1 | 5JJ–83310–10 | FRONT FLASHER LIGHT ASSY 1 | 1 | 1 | 1 | | | |
| | 5JJ–83310–00 | FRONT FLASHER LIGHT ASSY 1 | | | | 1 | | |
| 2 | 256–84714–61 | .BULB (12V–27/8W) | 1 | 1 | 1 | | | |
| | 306–83311–40 | .BULB, FLASHER (12V–21W) | | | | 1 | | |
| 3 | 4JH–83332–10 | .LENS, FLASHER | 1 | 1 | 1 | | | |
| | 4JH–83332–00 | .LENS, FLASHER | | | | 1 | | |
| 4 | 97702–40610 | .SCREW, TAPPING | 1 | 1 | 1 | 1 | | |
| 5 | 5JJ–83320–10 | FRONT FLASHER LIGHT ASSY 2 | 1 | 1 | 1 | | | |
| | 5JJ–83320–00 | FRONT FLASHER LIGHT ASSY 2 | | | | 1 | | |
| 6 | 256–84714–61 | .BULB (12V–27/8W) | 1 | 1 | 1 | | | |
| | 306–83311–40 | .BULB, FLASHER (12V–21W) | | | | 1 | | |
| 7 | 4JH–83342–10 | .LENS, FLASHER 2 | 1 | 1 | 1 | | | |
| | 4JH–83342–00 | .LENS, FLASHER 2 | | | | 1 | | |
| 8 | 97702–40610 | .SCREW, TAPPING | 1 | 1 | 1 | 1 | | |
| 9 | 5JJ–83318–00 | STAY, FLASHER 1 | 2 | 2 | 2 | 2 | | |
| 10 | 98507–04008 | SCREW, PAN HEAD | 2 | 2 | 2 | 2 | | |
| 11 | 92907–04600 | WASHER | 2 | 2 | 2 | 2 | | |
| 12 | 5JJ–83330–10 | REAR FLASHER LIGHT ASSY 1 | 1 | 1 | 1 | | | |
| | 5JJ–83330–00 | REAR FLASHER LIGHT ASSY 1 | | | | 1 | | |
| 13 | 256–83311–70 | .BULB (12V–27W) | 1 | 1 | 1 | | | |
| | 306–83311–40 | .BULB, FLASHER (12V–21W) | | | | 1 | | |
| 14 | 4JH–83342–10 | .LENS, FLASHER 2 | 1 | 1 | 1 | | | |
| | 4JH–83332–00 | .LENS, FLASHER | | | | 1 | | |
| 15 | 97702–40610 | .SCREW, TAPPING | 1 | 1 | 1 | 1 | | |
| 16 | 5JJ–83340–10 | FLASHER LIGHT ASSY 2 | 1 | 1 | 1 | | | |
| | 5JJ–83340–00 | FLASHER LIGHT ASSY 2 | | | | 1 | | |
| 17 | 256–83311–70 | .BULB (12V–27W) | 1 | 1 | 1 | | | |

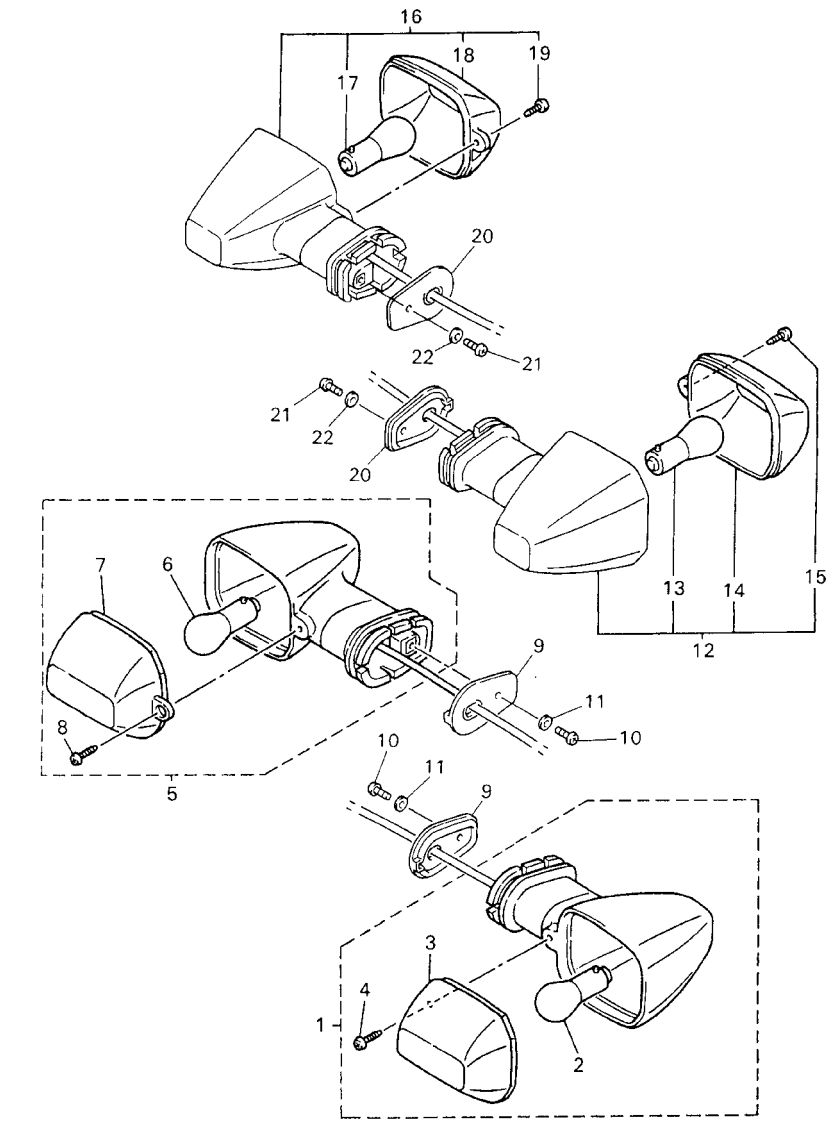


5JJ1300-0410

FIG. 41 FLASHER LIGHT

| REF. NO. | PART NO. | DESCRIPTION | 5JJ4 | 5JJ5 | 5JJ6 | 5JJ3 | | REMARKS |
|---|---|---|---|---|---|---|---|---|
| 17 | 306–83311–40 | .BULB, FLASHER (12V–21W) | | | | 1 | | |
| 18 | 4JH–83332–10 | .LENS, FLASHER | 1 | 1 | 1 | | | |
| | 4JH–83342–00 | .LENS, FLASHER 2 | | | | 1 | | |
| 19 | 97702–40610 | .SCREW, TAPPING | 1 | 1 | 1 | 1 | | |
| 20 | 5JJ–83318–00 | STAY, FLASHER 1 | 2 | 2 | 2 | 2 | | |
| 21 | 98507–04008 | SCREW, PAN HEAD | 2 | 2 | 2 | 2 | | |
| 22 | 92907–04600 | WASHER | 2 | 2 | 2 | 2 | | |

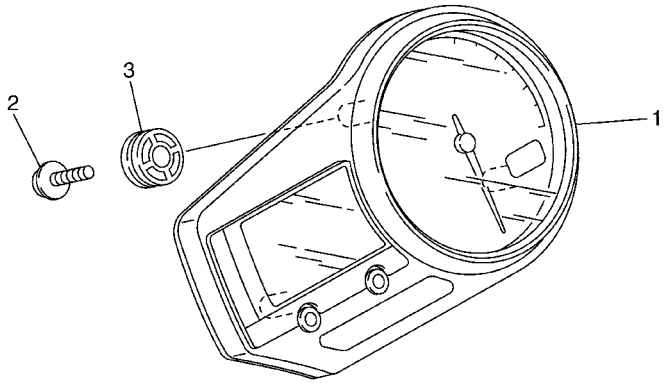


FIG. 42 METER

| REF. NO. | PART NO. | DESCRIPTION | 5JJ4 | 5JJ5 | 5JJ6 | 5JJ3 | | REMARKS |
|---|---|---|---|---|---|---|---|---|
| 1 | 5JJ–83500–20 | SPEEDOMETER ASSY | 1 | 1 | | | | |
| | 5JJ–83500–00 | SPEEDOMETER ASSY | | | 1 | 1 | | |
| 2 | 90164–05014 | SCREW, TAPPING | 3 | 3 | 3 | 3 | | |
| 3 | 4XV–83513–00 | DAMPER | 3 | 3 | 3 | 3 | | |

FWD

5JJ1300-0420

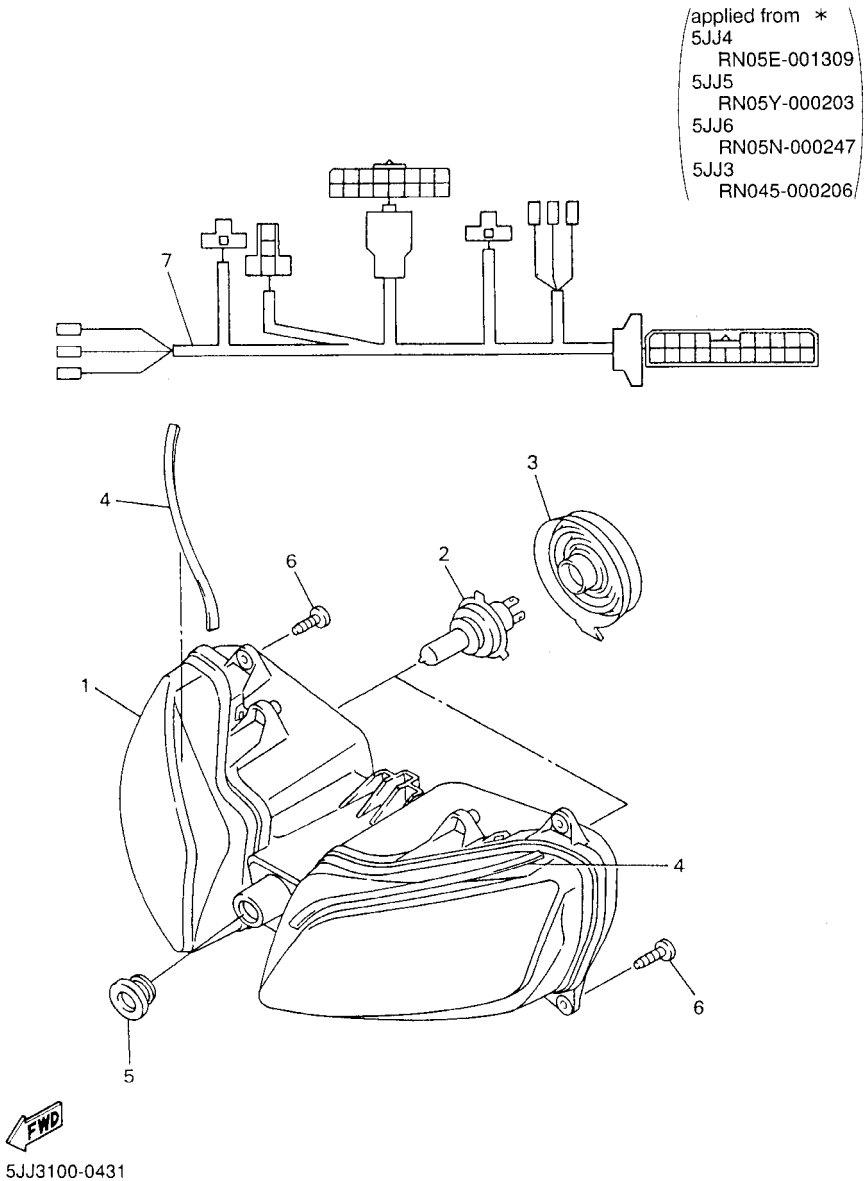


FIG. 43 HEADLIGHT

| REF. NO. | PART NO. | DESCRIPTION | 5JJ4 | 5JJ5 | 5JJ6 | 5JJ3 | | REMARKS |
|---|---|---|---|---|---|---|---|---|
| 1 | 5JJ–84310–20 | HEADLIGHT UNIT ASSY | 1 | 1 | 1 | 1 | | |
| 2 | 8V0–84314–00 | BULB (12V–60/55W) | 2 | 2 | 2 | 2 | | |
| 3 | 4SV–84397–00 | COVER, SOCKET | 2 | 2 | 2 | 2 | | |
| 4 | 5JJ–84345–00 | DAMPER, HEADLIGHT | 2 | 2 | 2 | 2 | | |
| 5 | 90480–18171 | GROMMET | 1 | 1 | 1 | 1 | | |
| 6 | 97707–50016 | SCREW, TAPPING | 4 | 4 | 4 | 4 | | |
| * 7 | 5JJ–84359–10 | CORD, HEADLIGHT | 1 | 1 | 1 | 1 | | |
| | 5JJ–84359–11 | CORD, HEADLIGHT | 1 | 1 | 1 | 1 | | applied from * |

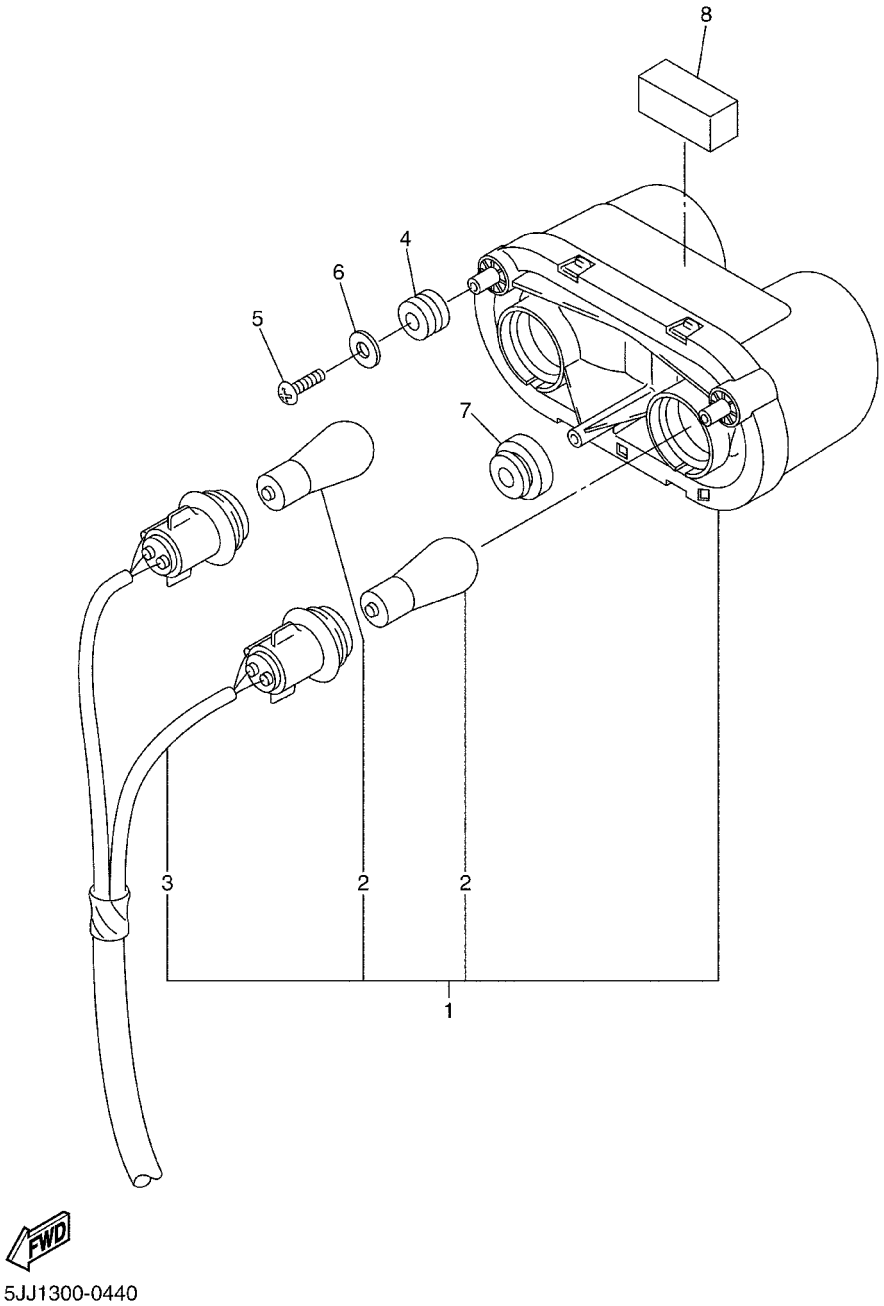


FIG. 44 TAILLIGHT

| REF. NO. | PART NO. | DESCRIPTION | 5JJ4 | 5JJ5 | 5JJ6 | 5JJ3 | | REMARKS |
|---|---|---|---|---|---|---|---|---|
| 1 | 5JJ–84710–10 | TAILLIGHT UNIT ASSY | 1 | 1 | 1 | | | |
| | 5JJ–84710–00 | TAILLIGHT UNIT ASSY | | | | 1 | | |
| 2 | 1A2–84714–41 | .BULB (12V–21/5W) | 2 | 2 | 2 | 2 | | |
| 3 | 5JJ–84755–00 | .CORD ASSY | 1 | 1 | 1 | 1 | | |
| 4 | 4XV–83513–00 | DAMPER | 2 | 2 | 2 | 2 | | |
| 5 | 97707–50016 | SCREW, TAPPING | 2 | 2 | 2 | 2 | | |
| 6 | 90201–05725 | WASHER, PLATE | 2 | 2 | 2 | 2 | | |
| 7 | 90480–18171 | GROMMET | 1 | 1 | 1 | 1 | | |
| 8 | 5JJ–21747–00 | DAMPER | 1 | 1 | 1 | 1 | | |

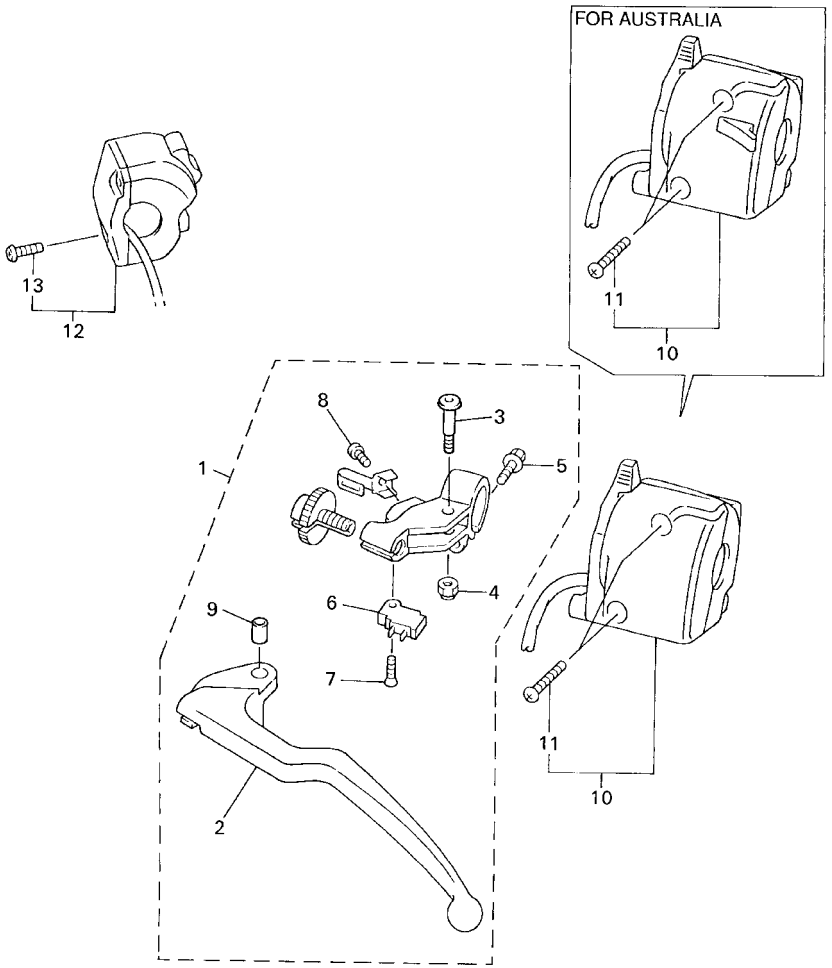


FIG. 45 HANDLE SWITCH. LEVER

| REF. NO. | PART NO. | DESCRIPTION | 5JJ4 | 5JJ5 | 5JJ6 | 5JJ3 | | REMARKS |
|---|---|---|---|---|---|---|---|---|
| 1 | 4XV–82910–11 | LEVER HOLDER ASSY (LEFT) | 1 | 1 | 1 | 1 | | |
| 2 | 4XV–83912–11 | .LEVER 1 | 1 | 1 | 1 | 1 | | |
| 3 | 4XV–83945–00 | .BOLT, LEVER | 1 | 1 | 1 | 1 | | |
| 4 | 95607–06100 | .NUT, U | 1 | 1 | 1 | 1 | | |
| 5 | 95027–06020 | .BOLT, FLANGE | 1 | 1 | 1 | 1 | | |
| 6 | 4XV–82917–00 | .SWITCH | 1 | 1 | 1 | 1 | | |
| 7 | 98707–03016 | .SCREW, FLAT HEAD | 1 | 1 | 1 | 1 | | |
| 8 | 98507–04010 | .SCREW, PAN HEAD | 1 | 1 | 1 | 1 | | |
| 9 | 5JJ–83913–00 | .COLLAR, LEVER 1 | 1 | 1 | 1 | 1 | | |
| 10 | 5JJ–83973–00 | SWITCH, HANDLE 3 | 1 | 1 | 1 | | | |
| | 5JJ–83972–00 | SWITCH, HANDLE 4 | | | | 1 | | |
| 11 | 98507–05025 | .SCREW, PAN HEAD | 2 | 2 | 2 | 2 | | |
| 12 | 4UN–83975–01 | SWITCH, HANDLE 2 | 1 | 1 | 1 | 1 | | |
| 13 | 98507–05022 | .SCREW, PAN HEAD | 2 | 2 | 2 | 2 | | |

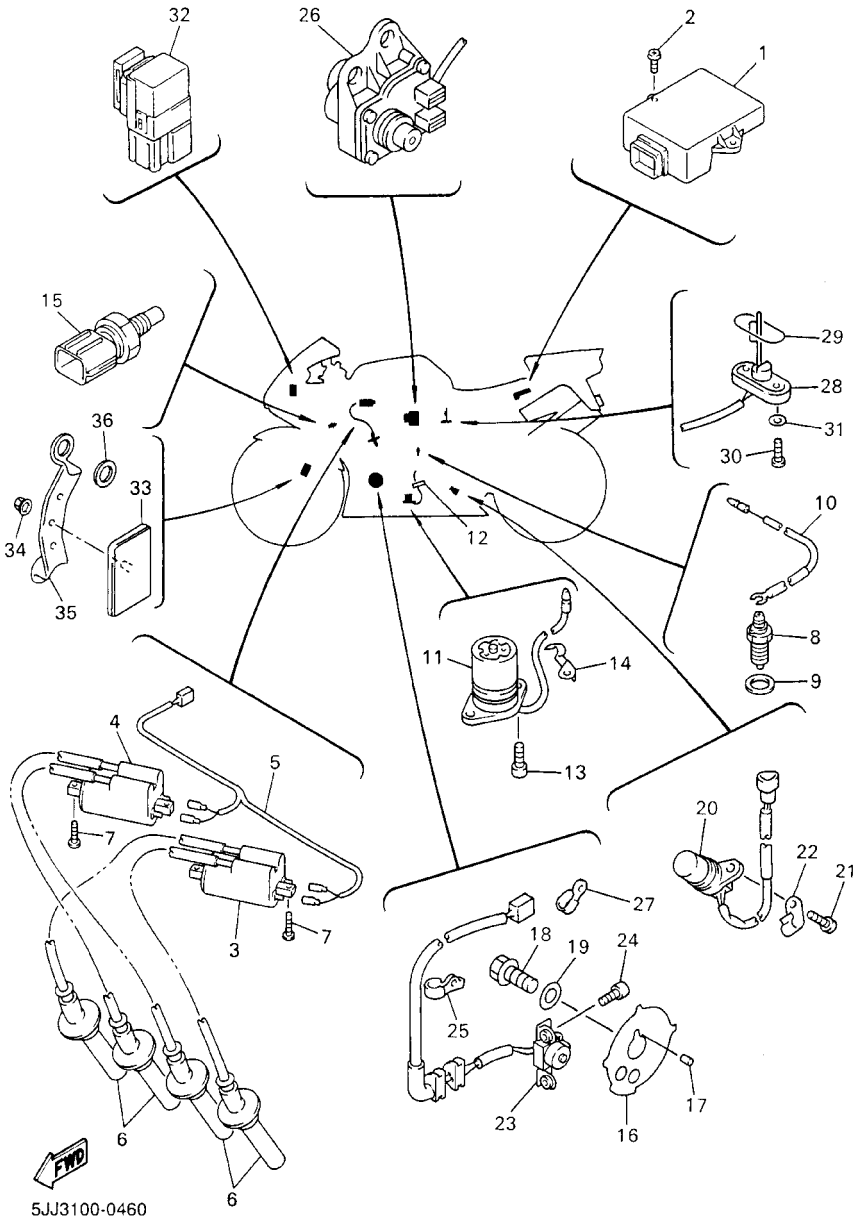


FIG. 46 ELECTRICAL 1

| REF. NO. | PART NO. | DESCRIPTION | 5JJ4 | 5JJ5 | 5JJ6 | 5JJ3 | | REMARKS |
|---|---|---|---|---|---|---|---|---|
| 1 | 5JJ–82305–40 | IGNITOR UNIT ASSY | 1 | | 1 | | | |
| | 5JJ–82305–30 | IGNITOR UNIT ASSY | | 1 | | | | |
| | 5JJ–82305–00 | IGNITOR UNIT ASSY | | | | 1 | | |
| 2 | 97707–50016 | SCREW, TAPPING | 2 | 2 | 2 | 2 | | |
| 3 | 4XV–82310–00 | IGNITION COIL ASSY | 1 | 1 | 1 | 1 | | |
| 4 | 4XV–82320–00 | IGNITION COIL ASSY | 1 | 1 | 1 | 1 | | |
| 5 | 4XV–82309–00 | WIRE, SUB LEAD | 1 | 1 | 1 | 1 | | |
| 6 | 4XV–82370–00 | PLUG CAP ASSY | 4 | 4 | 4 | 4 | | |
| 7 | 97707–60025 | SCREW, TAPPING | 4 | 4 | 4 | 4 | | |
| 8 | 3GB–82540–01 | NEUTRAL SWITCH ASSY | 1 | 1 | 1 | 1 | | |
| 9 | 90430–10148 | GASKET | 1 | 1 | 1 | 1 | | |
| 10 | 5JJ–82541–00 | WIRE, LEAD | 1 | 1 | 1 | 1 | | |
| 11 | 4XV–85720–01 | OIL LEVEL GAUGE ASSY | 1 | 1 | 1 | 1 | | |
| 12 | 5Y9–12491–00 | CLAMP 1 | 1 | 1 | 1 | 1 | | |
| 13 | 91317–06014 | BOLT | 2 | 2 | 2 | 2 | | |
| 14 | 90465–08013 | CLAMP | 1 | 1 | 1 | 1 | | |
| 15 | 5JJ–83591–00 | THERMO UNIT | 1 | 1 | 1 | 1 | | |
| 16 | 4XV–81673–00 | ROTOR | 1 | 1 | 1 | 1 | | |
| 17 | 93604–29151 | PIN, DOWEL | 1 | 1 | 1 | 1 | | |
| 18 | 90105–10290 | BOLT, WASHER BASED | 1 | 1 | 1 | 1 | | |
| 19 | 90201–107K6 | WASHER, PLATE | 1 | 1 | 1 | 1 | | |
| 20 | 4XV–83755–01 | SENSOR, SPEED | 1 | 1 | 1 | 1 | | |
| 21 | 91317–06014 | BOLT | 1 | 1 | 1 | 1 | | |
| 22 | 90465–08028 | CLAMP | 1 | 1 | 1 | 1 | | |
| 23 | 4XV–81670–10 | PICK–UP ASSY | 1 | 1 | 1 | 1 | | |
| 24 | 91317–06012 | BOLT | 2 | 2 | 2 | 2 | | |
| 25 | 90465–08191 | CLAMP | 1 | 1 | 1 | 1 | | |

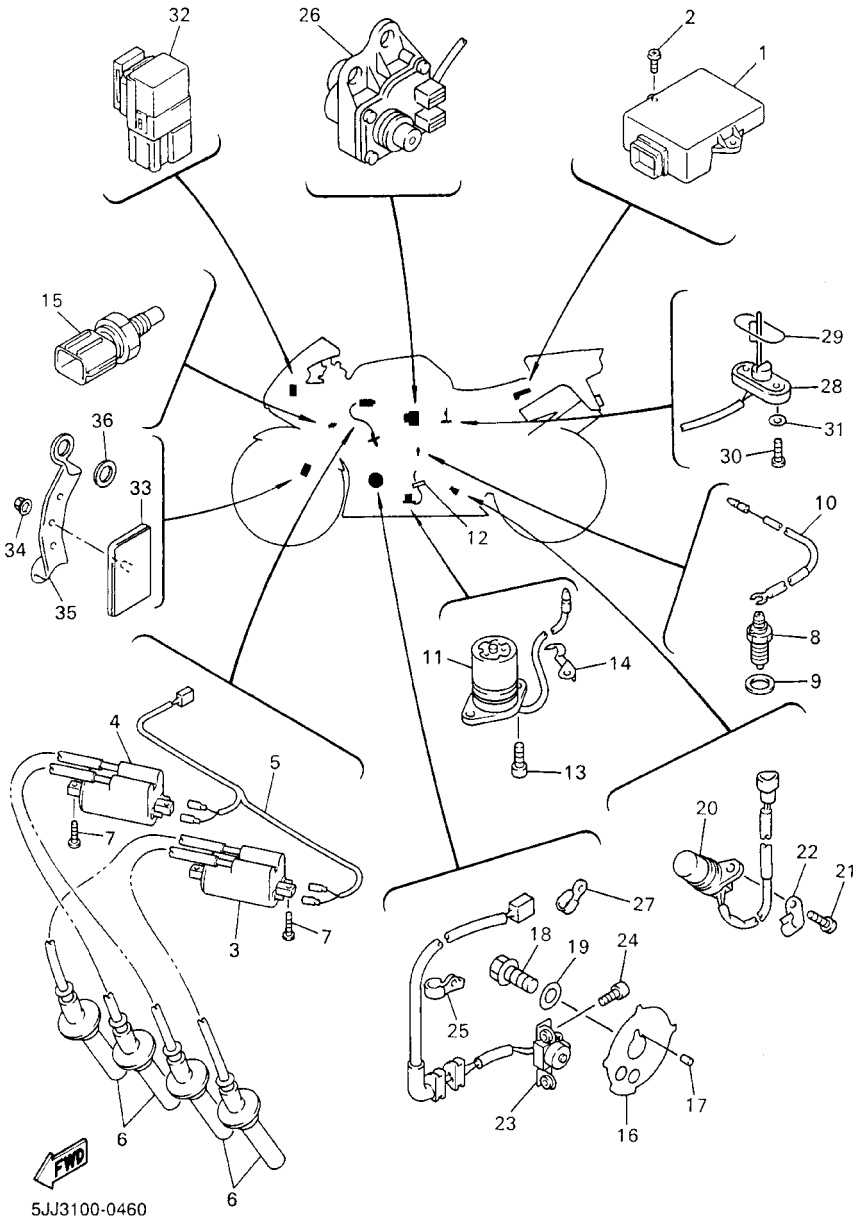


FIG. 46 ELECTRICAL 1

| REF. NO. | PART NO. | DESCRIPTION | 5JJ4 | 5JJ5 | 5JJ6 | 5JJ3 | | REMARKS |
|---|---|---|---|---|---|---|---|---|
| 26 | 4FM–85820–01 | SERVO MOTOR ASSY | 1 | 1 | 1 | 1 | | |
| 27 | 90462–08225 | CLAMP | 1 | 1 | 1 | 1 | | |
| 28 | 1UF–85752–02 | SENDER UNIT ASSY, FUEL METER | 1 | 1 | 1 | 1 | | |
| 29 | 42X–85753–00 | GASKET, SENDER UNIT | 1 | 1 | 1 | 1 | | |
| 30 | 90149–06011 | SCREW | 2 | 2 | 2 | 2 | | |
| 31 | 90202–05193 | WASHER, PLATE | 2 | 2 | 2 | 2 | | |
| 32 | 5JJ–81950–10 | RELAY ASSY | 1 | 1 | 1 | 1 | | |
| 33 | 20G–85110–00 | REFLECTOR ASSY | 2 | 2 | 2 | | | |
| 34 | 95707–05500 | NUT, FLANGE | 2 | 2 | 2 | | | |
| 35 | 4XV–85112–00 | BRACKET, REFLECTOR 1 | 2 | 2 | 2 | | | |
| 36 | 90201–08759 | WASHER, PLATE | 4 | 4 | 4 | | | |

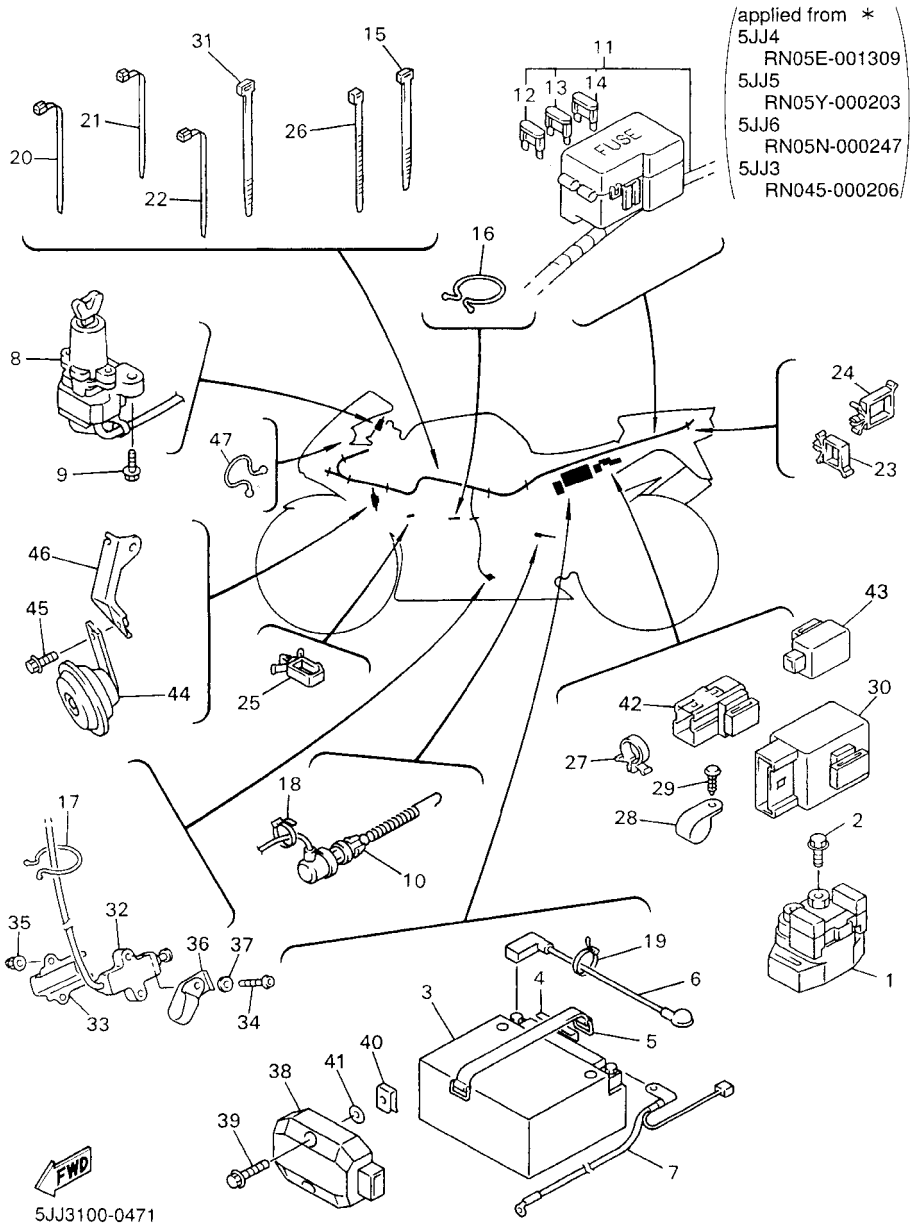


FIG. 47 ELECTRICAL 2

| REF. NO. | PART NO. | DESCRIPTION | 5JJ4 | 5JJ5 | 5JJ6 | 5JJ3 | | REMARKS |
|---|---|---|---|---|---|---|---|---|
| 1 | 4YR–81940–00 | STARTER RELAY ASSY | 1 | 1 | 1 | 1 | | |
| 2 | 95027–06008 | BOLT, FLANGE | 2 | 2 | 2 | 2 | | |
| 3 | 4TX–82100–01 | BATTERY ASSY (GT12B–4) | 1 | 1 | 1 | 1 | | |
| 4 | 2AL–84553–00 | DAMPER | 1 | 1 | 1 | 1 | | |
| 5 | 5JJ–82131–00 | BAND, BATTERY | 1 | 1 | 1 | 1 | | |
| 6 | 5JJ–82115–00 | WIRE, PLUS LEAD | 1 | 1 | 1 | 1 | | |
| 7 | 5JJ–82116–00 | WIRE, MINUS LEAD | 1 | 1 | 1 | 1 | | |
| 8 | 5JJ–82501–11 | MAIN SWITCH STEERING LOCK | 1 | 1 | 1 | 1 | | |
| 9 | 90109–080G5 | BOLT | 2 | 2 | 2 | 2 | | |
| 10 | 4XV–82530–01 | STOP SWITCH ASSY | 1 | 1 | 1 | 1 | | |
| *11 | 5JJ–82590–10 | WIRE HARNESS ASSY | 1 | 1 | 1 | 1 | | |
| | 5JJ–82590–11 | WIRE HARNESS ASSY | 1 | 1 | 1 | 1 | | applied from * |
| 12 | 5JJ–82151–30 | .FUSE (10A–BL) | 3 | 3 | 3 | 3 | | |
| 13 | 5JJ–82151–10 | .FUSE (15A–BL) | 2 | 2 | 2 | 2 | | |
| 14 | 5JJ–82151–20 | .FUSE (20A–BL) | 3 | 3 | 3 | 3 | | |
| 15 | 90464–12036 | CLAMP | 4 | 4 | 4 | 4 | | |
| 16 | 90464–37257 | CLAMP | 1 | 1 | 1 | 1 | | |
| 17 | 90464–16039 | CLAMP | 2 | 2 | 2 | 2 | | |
| 18 | 5Y9–12491–00 | CLAMP 1 | 1 | 1 | 1 | 1 | | |
| 19 | 90464–13077 | CLAMP | 2 | 2 | 2 | 2 | | |
| 20 | 90464–13073 | CLAMP | 5 | 5 | 5 | 5 | | |
| 21 | 90464–15195 | CLAMP | 3 | 3 | 3 | 3 | | |
| 22 | 90464–12036 | CLAMP | 1 | 1 | 1 | 1 | | |
| 23 | 90464–16021 | CLAMP | 1 | 1 | 1 | 1 | | |
| 24 | 90464–16025 | CLAMP | 1 | 1 | 1 | 1 | | |
| 25 | 90464–15157 | CLAMP | 1 | 1 | 1 | 1 | | |
| 26 | 90465–13275 | CLAMP | 1 | 1 | 1 | 1 | | |

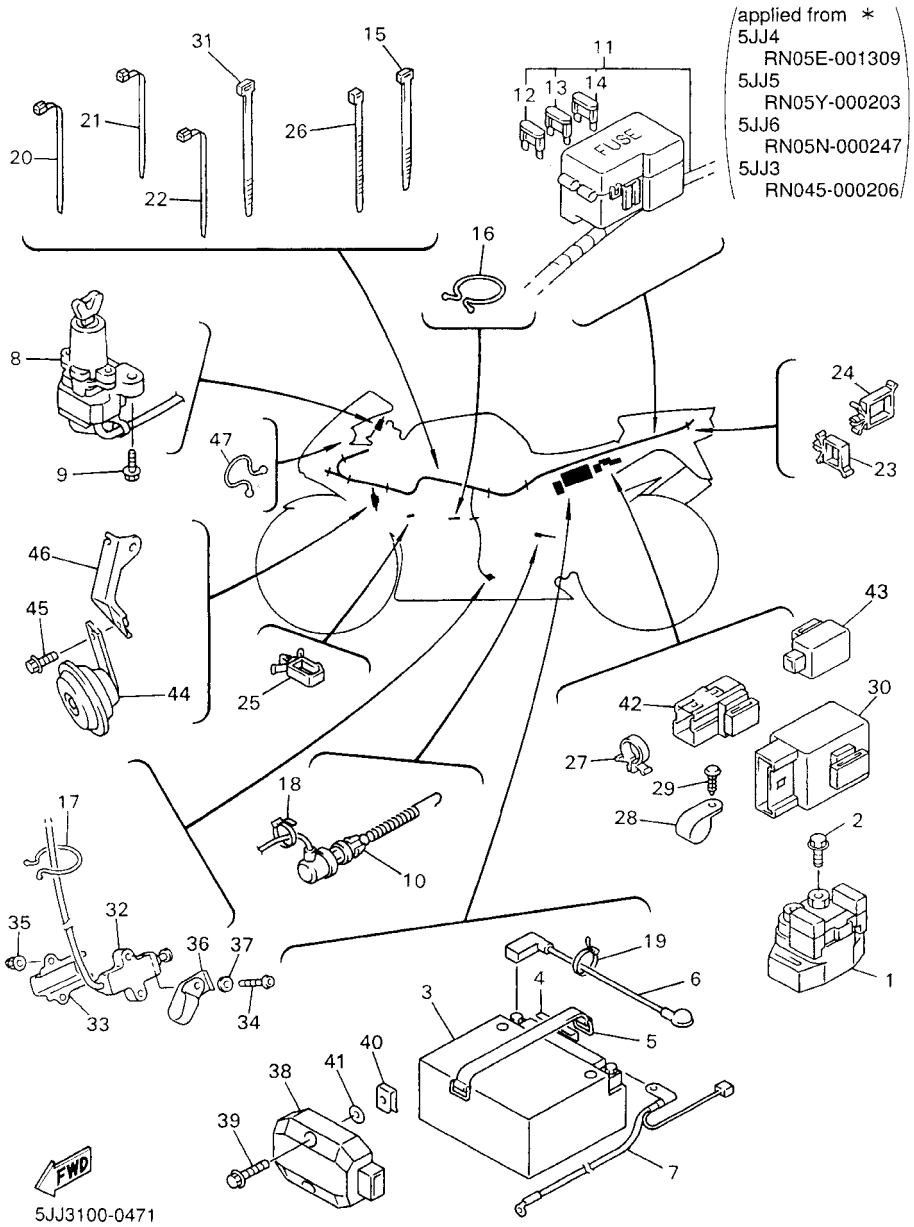


FIG. 47 ELECTRICAL 2

| REF. NO. | PART NO. | DESCRIPTION | 5JJ4 | 5JJ5 | 5JJ6 | 5JJ3 | | REMARKS |
|---|---|---|---|---|---|---|---|---|
| 27 | 90464–13133 | CLAMP | 2 | 2 | 2 | 2 | | |
| 28 | 90464–18029 | CLAMP | 2 | 2 | 2 | 2 | | |
| 29 | 97707–40012 | SCREW, TAPPING | 2 | 2 | 2 | 2 | | |
| 30 | 5EB–81950–20 | RELAY ASSY | 1 | 1 | 1 | 1 | | |
| 31 | 1UA–82591–00 | BAND | 1 | 1 | 1 | 1 | | |
| 32 | 5JJ–82566–00 | SWITCH, SIDE STAND | 1 | 1 | 1 | 1 | | |
| 33 | 5JJ–82388–00 | PLATE | 1 | 1 | 1 | 1 | | |
| 34 | 92017–05030 | BOLT, BUTTON HEAD | 2 | 2 | 2 | 2 | | |
| 35 | 95607–05200 | NUT, SELF–LOCKING | 2 | 2 | 2 | 2 | | |
| 36 | 90461–10002 | CLAMP | 1 | 1 | 1 | 1 | | |
| 37 | 90201–057H5 | WASHER, PLATE | 1 | 1 | 1 | 1 | | |
| 38 | 4JH–81960–01 | RECTIFIER & REGULATOR ASSY | 1 | 1 | 1 | 1 | | |
| 39 | 95827–06025 | BOLT, FLANGE | 2 | 2 | 2 | 2 | | |
| 40 | 90183–06053 | NUT, SPRING | 2 | 2 | 2 | 2 | | |
| 41 | 90202–05187 | WASHER, PLATE | 2 | 2 | 2 | 2 | | |
| 42 | 5JJ–81950–20 | RELAY ASSY | 1 | 1 | 1 | 1 | | |
| 43 | 4MY–83350–01 | FLASHER RELAY ASSY | 1 | 1 | 1 | 1 | | |
| 44 | 3TB–83371–01 | HORN | 1 | 1 | 1 | 1 | | |
| 45 | 95807–06010 | BOLT, FLANGE | 1 | 1 | 1 | 1 | | |
| 46 | 4XV–2134K–00 | BRACKET, HORN | 1 | 1 | 1 | 1 | | |
| *47 | 90464–16039 | CLAMP | 1 | 1 | 1 | 1 | | applied from * |

NUMERICAL INDEX

| PART NO. | GRID NO. |
|---|---|
| 5JJ–W0041–00 | E – 10 |
| 3TU–W0042–51 | E – 15 |
| 5JJ–W0045–00 | E – 5 |
| 5FL–W0046–50 | E – 8 |
| 3GM–W0047–10 | E – 5 |
| 3MA–W0047–10 | E – 5 |
| 4XV–W0047–50 | E – 8 |
| 1J3–W0048–00 | E – 5 |
| | E – 8 |
| 4SV–W0057–00 | E – 5 |
| 4SV–W0057–10 | E – 5 |
| 4XV–W0057–50 | E – 8 |
| 2TV–W2470–00 | E – 3 |
| 5JJ–W2587–00 | E – 10 |
| 5JJ–Y2171–00–P1 | D – 7 |
| 5JJ–Y2171–10–P0 | D – 7 |
| 5JJ–Y2410–30–01 | D – 14 |
| 5JJ–Y2410–30–02 | D – 14 |
| 5JJ–Y2808–00–P0 | F – 6 |
| 5JJ–Y2808–00–4B | F – 6 |
| 5JJ–Y2809–00–P0 | F – 6 |
| 5JJ–Y2809–00–4B | F – 6 |
| 5JJ–Y283G–00–1X | F – 3 |
| 5JJ–Y283G–10–0X | F – 3 |
| 4XV–Y283U–40–P1 | F – 5 |
| 4XV–Y283U–50–1X | F – 5 |
| 4XV–Y283V–40–P1 | F – 5 |
| 4XV–Y283V–50–1X | F – 5 |
| 5JJ–Y2881–30 | F – 3 |
| 5JJ–11102–00 | B – 2 |
| 4KG–1111G–00 | B – 2 |
| 1WG–11133–11 | B – 2 |
| 3TJ–11133–10 | B – 2 |
| 4XV–11145–00 | C – 7 |
| 4XV–11165–00 | C – 7 |
| 4XV–11181–00 | B – 2 |
| 4XV–11191–00 | B – 2 |
| 4XV–11193–00 | B – 2 |
| 214–11198–01 | B – 12 |
| 4XV–1130E–00 | C – 5 |
| 4XV–11411–00 | B – 3 |
| 3GM–11416–A0 | B – 3 |
| 3GM–11416–B0 | B – 3 |
| 3GM–11416–00 | B – 3 |
| 3GM–11416–10 | B – 3 |
| 3GM–11416–20 | B – 3 |
| 4XV–11549–00 | B – 3 |
| 4XV–11603–00 | B – 3 |

| PART NO. | GRID NO. |
|---|---|
| 4XV–11631–00 | B – 3 |
| 4XV–11633–00 | B – 3 |
| 4XV–11650–00 | B – 3 |
| 4XV–11654–00 | B – 3 |
| 3GM–11656–A0 | B – 3 |
| 3GM–11656–B0 | B – 3 |
| 3GM–11656–00 | B – 3 |
| 3GM–11656–10 | B – 3 |
| 4XV–12111–00 | B – 4 |
| 4XV–12112–00 | B – 4 |
| 4XV–12113–00 | B – 4 |
| 4XV–12114–00 | B – 4 |
| 1HX–12116–00 | B – 4 |
| 1HX–12117–00 | B – 4 |
| 1WG–12117–00 | B – 4 |
| 1HX–12118–00 | B – 4 |
| 1WG–12118–00 | B – 4 |
| 4SV–12119–00 | B – 4 |
| 4TV–12119–00 | B – 4 |
| 5JJ–12121–00 | B – 4 |
| 3GM–12126–00 | B – 4 |
| 3FV–12153–09 | B – 5 |
| 3FV–12153–20 | B – 5 |
| 3LN–12153–09 | B – 5 |
| 3LN–12153–20 | B – 5 |
| 1HX–12168–A0 | B – 4 |
| 1HX–12168–F0 | B – 4 |
| 1HX–12168–H1 | B – 4 |
| 1HX–12168–K1 | B – 4 |
| 1HX–12168–M1 | B – 4 |
| 1HX–12168–R1 | B – 4 |
| 1HX–12168–U1 | B – 4 |
| 1HX–12168–W1 | B – 4 |
| 1HX–12168–Y1 | B – 4 |
| 1HX–12168–00 | B – 4 |
| 1HX–12168–20 | B – 4 |
| 1HX–12168–40 | B – 4 |
| 1HX–12168–60 | B – 4 |
| 1HX–12168–80 | B – 4 |
| 1HX–12169–E0 | B – 5 |
| 1HX–12169–G0 | B – 5 |
| 1HX–12169–J0 | B – 5 |
| 1HX–12169–L0 | B – 5 |
| 1HX–12169–N0 | B – 5 |
| 1HX–12169–T0 | B – 5 |
| 1HX–12169–11 | B – 5 |
| 1HX–12169–31 | B – 5 |
| 1HX–12169–50 | B – 5 |

| PART NO. | GRID NO. |
|---|---|
| 1HX–12169–70 | B – 5 |
| 1HX–12169–90 | B – 5 |
| 5JJ–12171–00 | B – 6 |
| 4XV–12176–00 | B – 6 |
| 5JJ–12181–00 | B – 6 |
| 4XV–12210–00 | B – 6 |
| 4FM–12213–00 | B – 6 |
| 5BE–12241–00 | B – 6 |
| 4XV–12251–00 | B – 6 |
| 4XV–12252–00 | B – 6 |
| 4XV–12405–00 | B – 9 |
| 4FM–12410–00 | B – 9 |
| 4XV–12413–00 | B – 9 |
| 4XV–12417–00 | B – 9 |
| 4XV–12421–00 | B – 7 |
| 4XV–12422–00 | B – 7 |
| 4XV–1243A–00 | B – 9 |
| 11H–12438–00 | B – 7 |
| 4XV–12439–00 | B – 7 |
| 4XV–12450–00 | B – 7 |
| 5JJ–12461–00 | B – 9 |
| 4JH–12462–00 | B – 9 |
| 5JJ–12469–00 | B – 8 |
| 5JJ–12481–00 | B – 7 |
| 4XV–12482–00 | B – 8 |
| 4XV–12483–00 | B – 8 |
| 4XV–12484–00 | B – 9 |
| 4XV–12485–00 | B – 7 |
| 5Y9–12491–00 | G – 2 |
| | G – 4 |
| 4XV–12551–00 | B – 9 |
| 4XV–12552–00 | B – 10 |
| 5JJ–12576–00 | B – 8 |
| 4XV–12577–00 | B – 9 |
| 4XV–12578–00 | B – 9 |
| 4XV–12579–00 | B – 9 |
| 5JJ–12588–00 | B – 9 |
| 5JJ–12589–00 | B – 9 |
| 5JJ–12682–00 | B – 14 |
| 5JJ–12683–00 | B – 14 |
| 4XV–12822–00 | B – 12 |
| 5JJ–1316E–00 | B – 11 |
| 5JJ–13161–00 | B – 12 |
| 4XV–13310–00 | B – 7 |
| 4XV–13318–00 | B – 12 |
| 4XV–13327–00 | B – 11 |
| 4XV–13336–00 | B – 7 |
| 4XV–13354–00 | C – 12 |

| PART NO. | GRID NO. |
|---|---|
| 4XV–13355–00 | B – 7 |
| 4XV–13411–00 | B – 11 |
| 4XV–13412–00 | B – 11 |
| 4XV–13414–00 | B – 12 |
| 4XV–13416–00 | B – 12 |
| 4XV–13417–01 | B – 12 |
| 5GH–13440–00 | B – 12 |
| 5JJ–13470–00 | B – 12 |
| 4XV–13473–00 | B – 12 |
| 4XV–13475–00 | B – 12 |
| 4XV–13490–00 | B – 12 |
| 1AE–13582–00 | B – 2 |
| 4XV–13597–00 | B – 13 |
| 4XV–13598–00 | B – 13 |
| 4XV–13898–00 | B – 12 |
| 4SV–13907–01 | D – 15 |
| 4SV–1410A–00 | C – 3 |
| 4XV–14103–00 | C – 4 |
| 4SV–14105–00 | C – 2 |
| 4KM–14107–15 | C – 3 |
| 4SV–14112–00 | C – 3 |
| 4KM–14142–15 | C – 3 |
| 36Y–14147–00 | C – 4 |
| 4XV–14149–30 | C – 3 |
| 4XV–14149–40 | C – 4 |
| 4XV–14149–60 | C – 3 |
| 4XV–14149–70 | C – 4 |
| 4XV–14149–90 | C – 4 |
| 3LN–1416A–00 | C – 4 |
| 620–14186–00 | C – 3 |
| 4KP–14191–00 | C – 3 |
| 3JE–14197–00 | C – 3 |
| 4KM–14216–00 | C – 2 |
| 4SV–14216–00 | C – 2 |
| 3G2–14231–26 | C – 3 |
| 8CC–14232–24 | C – 3 |
| 4XV–14275–00 | C – 3 |
| 5JJ–14294–00 | B – 13 |
| 4NK–14327–00 | C – 3 |
| 3LN–14348–00 | C – 4 |
| 5JJ–14401–00 | B – 13 |
| 5JJ–14414–00 | B – 13 |
| 4XV–1443J–00 | B – 14 |
| 4XV–14451–00 | B – 13 |
| 4XV–14452–00 | B – 13 |
| 5JJ–14453–00 | B – 13 |
| 5JJ–1446A–00 | B – 13 |
| 4XV–14465–00 | B – 14 |

| PART NO. | GRID NO. |
|---|---|
| 4XV–14466–00 | B – 14 |
| 4XV–14562–00 | C – 3 |
| 1FN–14565–00 | C – 3 |
| 5JJ–14610–00 | C – 5 |
| 4FM–14613–00 | C – 5 |
| 4SV–14638–00 | C – 5 |
| 3GM–14683–00 | C – 5 |
| 5JJ–14710–00 | C – 5 |
| 5JJ–14710–10 | C – 5 |
| 4KM–14714–01 | B – 15 |
| 4XV–14714–00 | C – 5 |
| 5JJ–14715–00 | C – 5 |
| 5JJ–14803–00 | B – 15 |
| 5JJ–14811–00 | C – 5 |
| 4SV–14821–00 | C – 5 |
| 4HD–14826–00 | C – 5 |
| 2TK–14865–01 | C – 5 |
| 2TK–14867–01 | C – 5 |
| 5JJ–14867–00 | B – 15 |
| 5JJ–14871–00 | B – 2 |
| 5JJ–14872–00 | B – 15 |
| 5JJ–14873–00 | B – 15 |
| 5JJ–14874–00 | B – 15 |
| 5JJ–14881–00 | B – 15 |
| 5JJ–14882–00 | B – 15 |
| 5JJ–14883–00 | B – 15 |
| 5JJ–14884–00 | B – 15 |
| 5JJ–14886–00 | B – 15 |
| 4XV–1490J–00 | C – 2 |
| 4XV–1490J–30 | C – 2 |
| 3EN–1490K–00 | C – 4 |
| 5JJ–14900–00 | C – 2 |
| 5JJ–14900–20 | C – 2 |
| 5JJ–14900–40 | C – 2 |
| 5JJ–14901–00 | C – 2 |
| 5JJ–14901–20 | C – 2 |
| 5JJ–14901–40 | C – 2 |
| 5JJ–14902–00 | C – 2 |
| 5JJ–14902–20 | C – 2 |
| 5JJ–14902–40 | C – 2 |
| 5JJ–14903–00 | C – 2 |
| 5JJ–14903–20 | C – 2 |
| 5JJ–14903–40 | C – 2 |
| 5JJ–14904–00 | C – 2 |
| 5JJ–14904–20 | C – 2 |
| 5JJ–14904–40 | C – 2 |
| 4SV–14933–00 | C – 2 |
| 4SV–14935–00 | C – 3 |

| PART NO. | GRID NO. |
|---|---|
| 28V–14952–00 | C – 3 |
| 4SV–14968–00 | C – 2 |
| 4SV–14985–00 | C – 3 |
| 4SV–14987–00 | C – 3 |
| 4YW–14987–00 | C – 3 |
| 5JJ–14987–00 | C – 3 |
| 4KG–14995–00 | C – 2 |
| 5JJ–15100–00 | C – 7 |
| 4XV–15113–00 | C – 9 |
| 5JJ–15163–00 | C – 13 |
| 2H7–15361–00 | C – 7 |
| 3F9–15362–00 | C – 8 |
| 4XV–15411–00 | C – 8 |
| 5JJ–15416–00 | C – 8 |
| 4XV–15418–00 | C – 8 |
| 4XV–15421–00 | C – 8 |
| 5JJ–15425–00 | C – 8 |
| 4XV–15441–00 | C – 9 |
| 4XV–15451–00 | C – 8 |
| 5JJ–15456–00 | C – 8 |
| 4XV–15461–00 | C – 8 |
| 5JJ–15463–00 | C – 8 |
| 5JJ–15515–00 | C – 10 |
| 5JJ–15517–00 | C – 10 |
| 4XV–15521–00 | C – 10 |
| 4XV–15570–00 | C – 10 |
| 4XV–16150–02 | C – 11 |
| 26H–16154–00 | C – 11 |
| 4XV–16154–00 | C – 12 |
| 341–16321–13 | C – 11 |
| 2H7–16325–00 | C – 11 |
| 4XV–16331–00 | C – 11 |
| 36Y–16334–00 | C – 11 |
| 36Y–16335–00 | C – 11 |
| 4XV–16340–00 | C – 11 |
| 132–16346–00 | D – 2 |
| 4XV–16351–00 | C – 11 |
| 1TX–16352–00 | C – 11 |
| 4XV–16356–01 | C – 11 |
| 4XV–16370–00 | C – 11 |
| 4XV–16382–00 | C – 11 |
| 36Y–16383–00 | C – 11 |
| 4XV–16384–00 | C – 11 |
| 2H7–16385–00 | C – 11 |
| 5JJ–17121–00 | C – 13 |
| 5JJ–17131–00 | C – 13 |
| 5JJ–17151–00 | C – 13 |
| 5JJ–17158–00 | C – 13 |

NUMERICAL INDEX


| PART NO. | GRID NO. |
|---|---|
| 5JJ–17161–00 | C – 13 |
| 5JJ–17211–00 | C – 14 |
| 5JJ–17221–00 | C – 13 |
| 5JJ–17231–00 | C – 14 |
| 5JJ–17241–00 | C – 13 |
| 5JJ–17251–00 | C – 14 |
| 5JJ–17261–00 | C – 13 |
| 5JJ–17402–00 | C – 13 |
| 5JJ–17411–00 | C – 13 |
| 4XV–17460–00 | C – 14 |
| 5JJ–18101–00 | D – 2 |
| 5JJ–18110–00 | D – 2 |
| 5JJ–18112–00 | D – 2 |
| 4XV–18115–00 | D – 2 |
| 5JJ–18116–00 | D – 2 |
| 4XV–18127–00 | D – 2 |
| 5JJ–18140–00 | D – 2 |
| 4XV–18154–00 | D – 2 |
| 4XV–18511–00 | C – 15 |
| 5JJ–18512–00 | C – 15 |
| 4XV–18513–00 | C – 15 |
| 4XV–18531–00 | C – 15 |
| 4XV–18536–00 | C – 15 |
| 4XV–18540–00 | C – 15 |
| 136–18542–00 | C – 15 |
| 5JJ–21110–00 | D – 3 |
| 4XV–2116A–00 | D – 4 |
| 4XV–2116J–00 | D – 4 |
| 5JJ–2117E–00 | D – 5 |
| 4XV–2117F–00 | D – 3 |
| 4XV–2117K–00 | E – 3 |
| 4XV–2117M–00 | D – 3 |
| 4XV–2117N–00 | D – 4 |
| 4XV–2117R–00 | D – 4 |
| 4XV–2134K–00 | G – 5 |
| 5JJ–21348–00 | D – 14 |
| 4XV–2137Y–01 | D – 3 |
| 4XV–21376–00 | D – 5 |
| 3XV–2144G–00 | E – 13 |
| 4XV–21446–00 | D – 3 |
| 4X7–2149Y–00 | B – 13 |
| 4XV–21511–01–P0 | D – 5 |
| 4XV–21511–01–P1 | D – 5 |
| 5JJ–2153E–00 | F – 6 |
| 5JJ–21611–00 | D – 5 |
| 5JJ–21611–10 | D – 5 |
| 4XV–21621–00 | D – 5 |
| 4XV–21650–01–P1 | D – 9 |

| PART NO. | GRID NO. |
|---|---|
| 4XV–21650–01–33 | D – 9 |
| 5JJ–21669–01 | D – 6 |
| 4XV–21688–00 | D – 6 |
| 5JJ–2172X–00 | D – 6 |
| 3SP–21732–00 | D – 15 |
| 1JK–21735–00 | F – 6 |
| 1KT–21746–00 | D – 3 |
| 5JJ–21746–00 | D – 7 |
| 5JJ–21747–00 | F – 14 |
| 2TK–21757–00 | F – 5 |
| | F – 6 |
| 4XV–2177L–00 | F – 5 |
| | F – 6 |
| 4XV–21781–30 | D – 7 |
| 4XV–21781–40 | D – 7 |
| 5JJ–2179R–00 | D – 7 |
| 5JJ–2179V–00 | D – 7 |
| 26H–21828–00 | D – 7 |
| 4XV–21871–00 | D – 7 |
| 4XV–21875–00 | D – 7 |
| 5JJ–22110–00 | D – 8 |
| 5JJ–22128–00 | D – 8 |
| 5JJ–2214F–00 | D – 9 |
| 4FN–22141–00 | D – 8 |
| 5JJ–22151–00 | D – 8 |
| 4XV–2217A–00 | D – 8 |
| 4XV–2217M–00 | D – 8 |
| 4XV–22184–00 | D – 8 |
| 5JJ–22210–00 | D – 10 |
| 5JJ–22210–10 | D – 10 |
| 5JJ–22210–20 | D – 10 |
| 4XV–22311–01 | D – 9 |
| 5JJ–22332–00 | F – 2 |
| 5JJ–23102–00 | D – 12 |
| 5JJ–23103–00 | D – 12 |
| 4XV–23110–00 | D – 12 |
| 4XV–23111–00 | D – 12 |
| | D – 13 |
| 4XV–23118–00 | D – 12 |
| | D – 13 |
| 4XV–23120–00 | D – 12 |
| 5JJ–23136–00 | D – 12 |
| 5JJ–23141–00 | D – 12 |
| 4XV–23142–00 | D – 12 |
| | D – 13 |
| 4EB–23144–00 | D – 12 |
| 4XV–23145–00 | D – 12 |
| 5JJ–23146–00 | D – 12 |

| PART NO. | GRID NO. |
|---|---|
| 3XJ–23147–L0 | D – 12 |
| | D – 13 |
| 26H–23156–00 | D – 12 |
| 2K8–23158–L0 | D – 12 |
| 5JJ–23170–00 | D – 12 |
| 3LC–23181–00 | D – 12 |
| 5JJ–23340–00 | D – 13 |
| 3LC–23357–00 | D – 12 |
| | D – 13 |
| 4XV–2341B–00 | D – 11 |
| 4XV–23415–00 | D – 11 |
| 4XV–23418–00 | D – 11 |
| 4JH–23434–00 | E – 9 |
| 4XV–23435–00 | D – 11 |
| 3FV–23462–00 | D – 11 |
| 2H9–23469–00 | E – 9 |
| 4XV–23818–00 | D – 11 |
| 4XV–2411G–00 | D – 7 |
| 4XV–2411H–00 | D – 7 |
| 5JJ–24129–00 | D – 7 |
| 5JJ–24139–00 | D – 7 |
| 1LJ–2414J–00 | F – 3 |
| 4EU–24141–00 | F – 3 |
| 4XV–24170–00 | D – 15 |
| 25H–24180–00 | D – 15 |
| 2GH–24181–00 | D – 14 |
| 4FM–24181–00 | C – 5 |
| 4YR–24181–00 | D – 14 |
| 2GH–24183–00 | D – 14 |
| 4XV–24183–00 | D – 14 |
| 5JJ–24186–00 | D – 14 |
| 5JJ–24187–00 | D – 14 |
| 4XV–2419F–00 | D – 15 |
| 5JJ–24191–00 | D – 14 |
| 5JJ–24240–00 | D – 14 |
| 4XV–24311–00 | D – 15 |
| 4XV–24312–00 | D – 15 |
| 4XV–24313–01 | D – 15 |
| 4XV–24314–00 | D – 15 |
| 3PA–24356–00 | E – 10 |
| 4XV–24398–01 | D – 15 |
| 4SV–24411–00 | C – 2 |
| 4KM–24453–00 | C – 3 |
| 4XV–24453–00 | C – 3 |
| 4KM–24500–10 | D – 14 |
| 4X8–24512–00 | D – 14 |
| 3LN–24515–00 | C – 4 |
| 3AJ–24523–00 | D – 14 |

| PART NO. | GRID NO. |
|---|---|
| 3AJ–24534–00 | D – 14 |
| 1FK–24560–00 | D – 15 |
| 5JJ–24602–00 | D – 15 |
| 5JJ–2470F–00 | E – 3 |
| 5JJ–24710–00 | E – 3 |
| 5JJ–2475X–00 | E – 3 |
| 5JJ–24750–00 | E – 3 |
| 5JJ–24751–00 | E – 3 |
| 5JJ–2478E–00 | E – 3 |
| 4BP–24780–00 | E – 3 |
| 5JJ–24792–00 | E – 3 |
| 4XV–25117–00 | E – 4 |
| 4XV–25118–00 | E – 4 |
| 4XV–25168–00–33 | E – 4 |
| 4XV–25181–00 | E – 4 |
| 4XV–25186–00 | E – 4 |
| 4XV–25317–00 | E – 6 |
| 4XV–25327–00 | E – 6 |
| 4XV–25338–00–33 | E – 6 |
| 4XV–25364–00 | E – 6 |
| 5JJ–25366–00 | E – 6 |
| 5JJ–25367–00 | E – 6 |
| 4XV–25376–00 | E – 6 |
| 4XV–25377–00 | E – 6 |
| 4XV–25381–00 | E – 7 |
| 4XV–25383–00 | E – 6 |
| 4XV–25388–00 | E – 6 |
| 4XV–25389–00 | E – 6 |
| 29L–25398–00 | E – 4 |
| | E – 6 |
| 29L–25398–10 | E – 4 |
| | E – 6 |
| 29L–25398–20 | E – 4 |
| | E – 6 |
| 4XV–25443–20 | E – 6 |
| 5JJ–2580T–00 | E – 5 |
| 5JJ–2580U–00 | E – 5 |
| 5JJ–2580W–00 | E – 8 |
| 5JJ–2581T–00 | E – 5 |
| 4XV–25819–00 | E – 8 |
| 3LN–2582A–00 | E – 15 |
| 3TJ–2582F–01 | E – 10 |
| 4XV–2582W–00 | E – 8 |
| 3TU–2583V–01 | E – 15 |
| 3LN–2585F–00 | E – 15 |
| 3LN–2585H–00 | E – 15 |
| 3GM–25852–50 | E – 10 |
| 3XP–25852–50 | E – 15 |

| PART NO. | GRID NO. |
|---|---|
| 2VN–25854–00 | E – 15 |
| 3FV–25854–00 | E – 10 |
| 2J2–25855–50 | E – 10 |
| 2VN–25855–00 | E – 15 |
| 2VN–25866–00 | E – 10 |
| 56A–25867–00 | E – 10 |
| 4XV–2587A–00 | E – 10 |
| 4XV–25872–00 | E – 10 |
| 4XV–25873–00 | E – 11 |
| 4XV–25874–00 | E – 15 |
| 4XV–25875–00 | D – 5 |
| 4FM–25876–00 | F – 2 |
| 4XV–25876–00 | D – 5 |
| 4XV–25886–01 | F – 2 |
| 4XV–25887–00 | E – 10 |
| 3FV–2589A–00 | E – 10 |
| 3FV–2589F–00 | E – 10 |
| 3FV–2589G–00 | E – 10 |
| 3GM–2589H–00 | E – 10 |
| 5JJ–25894–00 | E – 15 |
| 5JJ–25894–10 | E – 10 |
| 5JJ–25895–00 | E – 15 |
| 4SV–25919–00 | E – 5 |
| 4XV–25919–50 | E – 8 |
| 4SV–25924–00 | E – 5 |
| | E – 8 |
| 3GM–25925–00 | E – 5 |
| | E – 8 |
| 4XV–26121–00 | E – 9 |
| 4XV–26122–00 | E – 9 |
| 4YR–26240–01 | E – 9 |
| 4YR–26241–01 | E – 9 |
| 4XV–26246–00 | E – 9 |
| 5JJ–26280–00 | F – 3 |
| 3XW–26281–01 | E – 9 |
| 3XW–26282–01 | E – 9 |
| 5JJ–26290–00 | F – 3 |
| 4SV–26298–00 | F – 3 |
| 4XV–26302–01 | E – 9 |
| 5JJ–26331–00 | E – 9 |
| 5EB–26332–00 | E – 10 |
| 5JJ–26335–00 | E – 9 |
| 5JJ–26399–00 | E – 9 |
| 5JJ–27211–00 | E – 15 |
| 4XV–27222–01 | E – 15 |
| 4XV–27311–00 | E – 12 |
| 5JJ–27315–00 | E – 12 |
| 5JJ–27321–00 | E – 12 |

| PART NO. | GRID NO. |
|---|---|
| 4NX–27351–00 | E – 12 |
| 5EB–27352–00 | E – 12 |
| 5JJ–27410–00 | E – 12 |
| 5JJ–27420–00 | E – 13 |
| 36Y–27424–00 | E – 13 |
| 4XV–27424–00 | D – 3 |
| 5JJ–27430–00 | E – 13 |
| 5JJ–27437–00 | E – 13 |
| 5JJ–27440–00 | E – 13 |
| 5JJ–27442–00 | E – 12 |
| 5JJ–27443–00 | E – 12 |
| 5JJ–27445–00 | E – 12 |
| 5JJ–27446–00 | E – 13 |
| 5JJ–27813–00 | E – 15 |
| 4XV–28100–00 | D – 6 |
| 5JJ–28301–00 | F – 5 |
| 5JJ–28301–10 | F – 5 |
| 5JJ–28303–00 | F – 5 |
| 5JJ–28303–10 | F – 5 |
| 4XV–28315–20 | F – 3 |
| 4XV–28315–30 | F – 3 |
| 5JJ–2832P–01 | F – 3 |
| 4XV–28328–20 | F – 5 |
| 4XV–28328–50 | F – 5 |
| 4XV–28336–00 | F – 3 |
| 4XV–28338–20 | F – 5 |
| 4XV–28338–40 | F – 5 |
| 1AE–2834E–00 | D – 6 |
| 4BR–2834E–00 | F – 6 |
| 4XV–2834E–00 | F – 3 |
| 5JJ–2834W–00 | F – 3 |
| 4XV–28349–00 | F – 3 |
| 5JJ–28356–01 | F – 3 |
| 4XV–2836A–00 | F – 5 |
| 4XV–2836E–00 | F – 5 |
| 4XV–2836F–00 | F – 7 |
| 4XV–2836G–00 | F – 7 |
| 4XV–2836K–10 | F – 6 |
| 4XV–2836L–10 | F – 6 |
| 4XV–2836M–10 | F – 6 |
| 4XV–2836M–10–P0 | F – 6 |
| 1AE–2837J–00 | D – 14 |
| 4XV–2837L–00 | F – 3 |
| 4XV–2837M–00 | F – 3 |
| 1TX–28371–00 | F – 3 |
| | F – 6 |
| 4SV–28371–00 | F – 6 |
| 4XV–28371–00 | D – 3 |

NUMERICAL INDEX

| PART NO. | GRID NO. |
|---|---|
| 4XV–28372–00 | D – 9 |
| 3XV–28386–00 | F – 3 |
| | F – 6 |
| 4XV–2839H–50 | F – 5 |
| 4XV–2839H–60 | F – 5 |
| 5JJ–2848L–00 | F – 6 |
| 5JJ–2848M–00 | F – 6 |
| 4XV–81410–00 | F – 8 |
| 4XV–81450–00 | F – 8 |
| 4XV–81670–10 | G – 2 |
| 4XV–81673–00 | G – 2 |
| 5JJ–81801–00 | F – 9 |
| 5JJ–81828–00 | F – 9 |
| 5JJ–8183G–00 | F – 9 |
| 5JJ–81846–00 | F – 9 |
| 5JJ–81890–00 | F – 9 |
| 4YR–81940–00 | G – 4 |
| 5EB–81950–20 | G – 5 |
| 5JJ–81950–10 | G – 3 |
| 5JJ–81950–20 | G – 5 |
| 4JH–81960–01 | G – 5 |
| 4TX–82100–01 | G – 4 |
| 5JJ–82115–00 | G – 4 |
| 5JJ–82116–00 | G – 4 |
| 5JJ–82131–00 | G – 4 |
| 5JJ–82151–10 | G – 4 |
| 5JJ–82151–20 | G – 4 |
| 5JJ–82151–30 | G – 4 |
| 5JJ–82305–00 | G – 2 |
| 5JJ–82305–30 | G – 2 |
| 5JJ–82305–40 | G – 2 |
| 4XV–82309–00 | G – 2 |
| 4XV–82310–00 | G – 2 |
| 4XV–82320–00 | G – 2 |
| 5H0–8235Y–M0 | D – 15 |
| 4XV–82370–00 | G – 2 |
| 5JJ–82388–00 | G – 5 |
| 5JJ–82501–11 | G – 4 |
| 4XV–82530–01 | G – 4 |
| 3GB–82540–01 | G – 2 |
| 5JJ–82541–00 | G – 2 |
| 5JJ–82566–00 | G – 5 |
| 5JJ–82590–10 | G – 4 |
| 1UA–82591–00 | G – 5 |
| 4XV–82910–11 | F – 15 |
| 4XV–82917–00 | F – 15 |
| 5JJ–83310–00 | F – 10 |
| 5JJ–83310–10 | F – 10 |

| PART NO. | GRID NO. |
|---|---|
| 256–83311–70 | F – 10 |
| 306–83311–40 | F – 10 |
| | F – 11 |
| 5JJ–83318–00 | F – 10 |
| | F – 11 |
| 5JJ–83320–00 | F – 10 |
| 5JJ–83320–10 | F – 10 |
| 5JJ–83330–00 | F – 10 |
| 5JJ–83330–10 | F – 10 |
| 4JH–83332–00 | F – 10 |
| 4JH–83332–10 | F – 10 |
| | F – 11 |
| 5JJ–83340–00 | F – 10 |
| 5JJ–83340–10 | F – 10 |
| 4JH–83342–00 | F – 10 |
| | F – 11 |
| 4JH–83342–10 | F – 10 |
| 4MY–83350–01 | G – 5 |
| 3TB–83371–01 | G – 5 |
| 5JJ–83500–00 | F – 12 |
| 5JJ–83500–20 | F – 12 |
| 4XV–83513–00 | F – 12 |
| | F – 14 |
| | F – 3 |
| 5JJ–83591–00 | G – 2 |
| 4XV–83755–01 | G – 2 |
| 4XV–83912–11 | F – 15 |
| 5JJ–83913–00 | F – 15 |
| 4XV–83922–01 | E – 10 |
| 4XV–83945–00 | F – 15 |
| 5JJ–83972–00 | F – 15 |
| 5JJ–83973–00 | F – 15 |
| 4UN–83975–01 | F – 15 |
| 3FV–83980–00 | E – 10 |
| 5JJ–84310–20 | F – 13 |
| 8V0–84314–00 | F – 13 |
| 5JJ–84345–00 | F – 13 |
| 5JJ–84359–10 | F – 13 |
| 4SV–84397–00 | F – 13 |
| 2AL–84553–00 | G – 4 |
| 5JJ–84710–00 | F – 14 |
| 5JJ–84710–10 | F – 14 |
| 1A2–84714–41 | F – 14 |
| 256–84714–61 | F – 10 |
| 5JJ–84751–00 | D – 6 |
| 5JJ–84755–00 | F – 14 |
| 20G–85110–00 | G – 3 |
| 4XV–85112–00 | G – 3 |

| PART NO. | GRID NO. |
|---|---|
| 3Y6–85130–02 | D – 6 |
| 4XV–85132–00 | D – 5 |
| 4XV–85720–01 | G – 2 |
| 1UF–85752–02 | G – 3 |
| 42X–85753–00 | G – 3 |
| 4FM–85820–01 | G – 3 |
| 4SV–85885–00 | C – 3 |
| 4XV–90445–00 | C – 3 |
| 90101–08662 | E – 12 |
| 90101–08766 | E – 7 |
| 90105–06154 | B – 7 |
| 90105–06384 | B – 2 |
| 90105–07342 | B – 6 |
| 90105–08015 | C – 7 |
| 90105–093A5 | C – 7 |
| 90105–10017 | D – 8 |
| 90105–10018 | D – 8 |
| 90105–10020 | D – 10 |
| 90105–10021 | D – 8 |
| 90105–10022 | E – 14 |
| 90105–10290 | G – 2 |
| 90105–105A0 | E – 8 |
| 90105–105A6 | F – 8 |
| 90105–105A7 | E – 5 |
| 90109–06013 | E – 15 |
| 90109–06014 | C – 8 |
| | C – 9 |
| 90109–06015 | C – 8 |
| | C – 9 |
| 90109–064G6 | E – 5 |
| | E – 8 |
| 90109–065G3 | C – 7 |
| 90109–066F0 | B – 2 |
| 90109–080G5 | G – 4 |
| 90109–083E0 | E – 12 |
| | E – 13 |
| 90109–085G6 | E – 12 |
| | E – 13 |
| 90109–10002 | E – 12 |
| 90109–104G5 | D – 3 |
| 90110–05112 | D – 15 |
| 90110–05201 | D – 7 |
| 90110–06136 | C – 9 |
| 90110–06224 | C – 8 |
| 90110–06225 | B – 12 |
| 90110–06226 | B – 8 |
| | B – 9 |
| | C – 15 |

| PART NO. | GRID NO. |
|---|---|
| 90110–06226 | E – 12 |
| 90110–06258 | E – 3 |
| 90111–06019 | D – 2 |
| 90116–10485 | E – 6 |
| 90116–10619 | C – 7 |
| 90119–06009 | D – 5 |
| 90119–06010 | D – 5 |
| 90119–06044 | D – 14 |
| 90119–06052 | D – 9 |
| | F – 6 |
| 90119–06096 | D – 15 |
| | D – 9 |
| 90119–06114 | D – 11 |
| 90119–06115 | C – 5 |
| 90119–06117 | D – 7 |
| 90119–06187 | C – 5 |
| 90119–06190 | D – 14 |
| 90149–04278 | D – 5 |
| | D – 6 |
| 90149–06011 | D – 14 |
| | G – 3 |
| 90149–06233 | E – 12 |
| | E – 13 |
| 90149–06286 | C – 13 |
| 90149–06308 | E – 3 |
| 90149–08296 | E – 12 |
| | E – 13 |
| 90150–05023 | F – 3 |
| 90150–05039 | D – 7 |
| 90150–06036 | D – 7 |
| | F – 6 |
| 90154–05013 | D – 4 |
| | D – 5 |
| | F – 3 |
| 90154–06061 | D – 5 |
| 90159–06056 | E – 15 |
| 90164–05014 | F – 12 |
| | F – 3 |
| 90170–06228 | D – 2 |
| 90170–20323 | C – 11 |
| 90170–28419 | D – 11 |
| 90176–06055 | F – 4 |
| 90176–10075 | B – 2 |
| 90179–05523 | F – 3 |
| 90179–08327 | B – 3 |
| 90179–08410 | C – 5 |
| 90179–10683 | B – 2 |
| 90179–10693 | B – 2 |

| PART NO. | GRID NO. |
|---|---|
| 90179–22063 | C – 14 |
| 90179–30691 | D – 11 |
| 90183–05061 | D – 5 |
| | D – 7 |
| 90183–05074 | F – 3 |
| 90183–06053 | E – 15 |
| | G – 5 |
| 90185–10002 | D – 3 |
| 90185–18167 | D – 8 |
| 90185–24165 | E – 7 |
| 90201–04018 | D – 5 |
| | D – 6 |
| 90201–050T4 | C – 5 |
| 90201–057H5 | G – 5 |
| 90201–05725 | D – 6 |
| | F – 14 |
| 90201–06042 | E – 12 |
| | E – 13 |
| 90201–06057 | D – 6 |
| 90201–06071 | B – 9 |
| 90201–08089 | C – 10 |
| 90201–081R9 | E – 12 |
| 90201–08612 | C – 6 |
| 90201–08759 | G – 3 |
| 90201–096J9 | C – 7 |
| 90201–10008 | D – 3 |
| 90201–10013 | B – 2 |
| 90201–101J1 | E – 12 |
| 90201–10118 | E – 11 |
| | E – 15 |
| 90201–103U7 | F – 8 |
| 90201–106M5 | C – 5 |
| 90201–10614 | C – 12 |
| 90201–10669 | E – 14 |
| 90201–107K6 | G – 2 |
| 90201–120K4 | D – 2 |
| 90201–12541 | B – 7 |
| 90201–13008 | E – 12 |
| | E – 13 |
| 90201–146F9 | E – 12 |
| 90201–18264 | D – 8 |
| 90201–224L4 | C – 14 |
| 90201–257R5 | E – 7 |
| 90201–281U8 | D – 11 |
| 90202–05187 | G – 5 |
| 90202–05193 | D – 14 |
| | G – 3 |
| 90202–30235 | D – 11 |

| PART NO. | GRID NO. |
|---|---|
| 90209–25342 | C – 13 |
| 90209–25349 | C – 13 |
| 90209–25350 | C – 13 |
| 90209–30343 | C – 14 |
| 90209–30344 | C – 13 |
| 90209–30345 | C – 13 |
| 90215–25218 | C – 11 |
| 90215–30233 | C – 14 |
| 90243–08029 | E – 12 |
| | E – 13 |
| 90250–08022 | C – 8 |
| 90269–07077 | D – 3 |
| | D – 5 |
| | D – 7 |
| | F – 7 |
| 90269–07084 | D – 3 |
| 90269–08001 | F – 2 |
| 90338–07124 | D – 3 |
| 90338–15202 | D – 3 |
| 90338–16262 | C – 7 |
| 90338–20263 | C – 7 |
| 90340–14132 | B – 12 |
| 90340–27001 | B – 2 |
| 90340–32116 | C – 8 |
| 90387–06006 | D – 14 |
| 90387–06007 | D – 14 |
| 90387–061K9 | D – 4 |
| 90387–0615J | D – 9 |
| 90387–062L2 | D – 15 |
| | E – 2 |
| 90387–06372 | D – 9 |
| 90387–065J6 | B – 13 |
| | D – 5 |
| 90387–06697 | E – 13 |
| 90387–07391 | B – 15 |
| | B – 9 |
| 90387–08005 | D – 3 |
| 90387–10001 | E – 14 |
| 90387–1012A | D – 8 |
| 90387–1012B | D – 8 |
| 90387–1013U | D – 8 |
| 90387–106U7 | C – 5 |
| 90387–1112F | D – 3 |
| 90387–12002 | D – 3 |
| 90387–2511A | C – 13 |
| 90387–2810U | C – 13 |
| 90387–2811B | C – 13 |
| 90387–3310V | C – 13 |

| PART NO. | GRID NO. |
|---|---|
| 90387–3311C | C – 13 |
| 90401–10160 | E – 11 |
| 90401–10172 | E – 11 |
| | E – 15 |
| 90401–20145 | B – 12 |
| 90413–07007 | B – 13 |
| 90413–08012 | B – 14 |
| 90413–10016 | C – 4 |
| 90430–06014 | B – 2 |
| | C – 10 |
| 90430–08143 | C – 8 |
| 90430–10148 | G – 2 |
| 90445–086J6 | D – 7 |
| 90445–09074 | B – 10 |
| 90445–10015 | D – 15 |
| 90445–10143 | B – 13 |
| 90445–11013 | B – 13 |
| 90445–11418 | E – 2 |
| 90445–11452 | B – 13 |
| 90445–117K0 | B – 13 |
| 90445–11730 | B – 13 |
| 90445–142K2 | D – 15 |
| 90445–161K7 | C – 7 |
| 90445–19002 | E – 12 |
| 90446–17346 | E – 15 |
| 90450–22017 | B – 10 |
| 90450–28014 | B – 9 |
| 90450–32015 | B – 9 |
| 90450–38040 | B – 8 |
| | B – 9 |
| 90450–57044 | B – 13 |
| 90450–75083 | B – 13 |
| 90461–10002 | G – 5 |
| 90461–10003 | C – 8 |
| 90461–15100 | D – 15 |
| 90462–08225 | G – 3 |
| 90462–10182 | F – 8 |
| 90464–07259 | D – 5 |
| 90464–12036 | G – 4 |
| 90464–13073 | G – 4 |
| 90464–13077 | G – 4 |
| 90464–13133 | G – 4 |
| 90464–15157 | G – 4 |
| 90464–15195 | G – 4 |
| 90464–16021 | G – 4 |
| 90464–16025 | G – 4 |
| 90464–16039 | G – 4 |
| 90464–18029 | G – 5 |

| PART NO. | GRID NO. |
|---|---|
| 90464–37257 | G – 4 |
| 90465–08013 | G – 2 |
| 90465–08028 | G – 2 |
| 90465–08191 | G – 2 |
| 90465–13275 | G – 4 |
| 90467–08003 | B – 10 |
| | D – 7 |
| 90467–08092 | B – 15 |
| 90467–09006 | D – 15 |
| 90467–10008 | B – 14 |
| | E – 2 |
| 90467–10041 | B – 13 |
| 90467–11019 | D – 7 |
| 90467–11090 | B – 10 |
| | B – 13 |
| | B – 9 |
| | C – 4 |
| 90467–12124 | D – 15 |
| 90467–12191 | E – 15 |
| 90467–13042 | B – 13 |
| 90467–13123 | D – 15 |
| 90467–14015 | C – 7 |
| 90467–14057 | E – 15 |
| 90467–15001 | B – 15 |
| 90467–15054 | B – 15 |
| 90467–16098 | B – 13 |
| 90467–17089 | B – 15 |
| 90468–08104 | C – 7 |
| 90468–12069 | B – 3 |
| 90480–12072 | D – 5 |
| 90480–12314 | B – 13 |
| 90480–13163 | D – 15 |
| 90480–13398 | D – 7 |
| | F – 5 |
| | F – 6 |
| 90480–15316 | B – 15 |
| 90480–15363 | B – 9 |
| 90480–18171 | F – 13 |
| | F – 14 |
| 90501–064L1 | C – 15 |
| 90501–12743 | E – 13 |
| 90506–14002 | D – 2 |
| 90506–18003 | E – 12 |
| 90506–20377 | E – 15 |
| 90508–164B2 | C – 11 |
| 90508–18134 | E – 12 |
| 90508–18135 | E – 13 |
| 90508–29012 | D – 2 |

| PART NO. | GRID NO. |
|---|---|
| 91314–06016 | D – 14 |
| 91314–06020 | C – 8 |
| 91314–06025 | C – 8 |
| 91314–06035 | C – 8 |
| | E – 13 |
| 91314–06040 | C – 8 |
| 91314–06050 | C – 8 |
| 91314–08030 | D – 11 |
| | D – 13 |
| | E – 9 |
| 91314–08040 | D – 13 |
| 91314–10040 | D – 3 |
| 91314–10050 | D – 3 |
| 91317–05010 | D – 15 |
| 91317–06010 | C – 10 |
| | E – 11 |
| 91317–06012 | B – 11 |
| | B – 12 |
| | B – 15 |
| | B – 2 |
| | C – 7 |
| | E – 10 |
| | F – 8 |
| | G – 2 |
| 91317–06014 | G – 2 |
| 91317–06016 | B – 8 |
| 91317–06020 | B – 11 |
| 91317–06025 | B – 12 |
| | B – 7 |
| | E – 9 |
| 91317–06035 | B – 7 |
| 91317–06040 | B – 7 |
| 91317–06045 | B – 7 |
| 91317–06060 | B – 2 |
| 91380–04006 | C – 5 |
| 91401–16012 | E – 15 |
| 91701–06018 | E – 15 |
| 91808–16023 | B – 2 |
| 91808–30031 | B – 7 |
| 92014–08016 | C – 8 |
| 92017–05030 | G – 5 |
| 92017–06014 | C – 10 |
| 92017–06030 | F – 8 |
| 92902–04100 | E – 10 |
| 92902–04600 | E – 10 |
| 92907–04600 | F – 10 |
| | F – 11 |
| 92907–05600 | D – 15 |

| PART NO. | GRID NO. |
|---|---|
| 92907–06200 | E – 15 |
| 92907–06600 | D – 5 |
| 92907–08600 | C – 11 |
| 92990–04600 | C – 5 |
| 92990–06600 | C – 5 |
| 93101–12004 | D – 2 |
| 93102–12372 | B – 7 |
| 93102–15212 | C – 11 |
| 93102–45465 | C – 14 |
| 93106–28043 | E – 4 |
| 93106–35042 | E – 6 |
| 93106–40013 | E – 6 |
| 93109–17071 | D – 8 |
| 93210–06667 | B – 11 |
| | B – 7 |
| 93210–09165 | B – 11 |
| 93210–12790 | C – 7 |
| 93210–14579 | B – 12 |
| 93210–15566 | B – 12 |
| 93210–15620 | E – 10 |
| 93210–16314 | C – 7 |
| 93210–18417 | B – 8 |
| 93210–235A1 | B – 7 |
| 93210–23787 | B – 9 |
| 93210–25711 | F – 9 |
| 93210–27194 | C – 8 |
| 93210–27370 | B – 8 |
| 93210–32172 | C – 8 |
| 93210–357A2 | B – 7 |
| 93210–47675 | B – 8 |
| 93210–55669 | F – 9 |
| 93306–00106 | B – 7 |
| 93306–00304 | C – 11 |
| 93306–00420 | E – 4 |
| 93306–07806 | E – 6 |
| 93306–20531 | E – 6 |
| 93306–20705 | C – 13 |
| 93306–27208 | C – 13 |
| 93306–37209 | C – 14 |
| 93306–37807 | C – 13 |
| 93310–228S5 | C – 11 |
| 93310–338S6 | C – 10 |
| 93315–11206 | D – 2 |
| 93315–31502 | C – 12 |
| 93315–31758 | D – 8 |
| 93315–42523 | D – 8 |
| 93315–42536 | D – 8 |
| 93317–11020 | C – 11 |

| PART NO. | GRID NO. |
|---|---|
| 93317–43580 | E – 6 |
| 93399–99932 | D – 11 |
| 93410–08072 | C – 10 |
| 93440–07149 | B – 2 |
| 93440–10153 | B – 2 |
| 93440–28062 | C – 13 |
| 93440–32063 | C – 13 |
| 93440–72049 | C – 14 |
| 93501–04011 | E – 13 |
| 93603–12007 | B – 7 |
| 93603–17070 | B – 7 |
| 93604–10011 | B – 7 |
| 93604–29151 | G – 2 |
| 93607–44190 | B – 6 |
| 93900–00030 | E – 4 |
| | E – 6 |
| 94112–17012 | E – 4 |
| 94119–17009 | E – 6 |
| 94580–25078 | B – 11 |
| 94581–69114 | E – 6 |
| 94591–49130 | B – 6 |
| 94681–69031 | E – 6 |
| 94701–00318 | B – 2 |
| 94701–00319 | B – 2 |
| 95024–08035 | D – 3 |
| 95027–06008 | G – 4 |
| 95027–06010 | F – 2 |
| 95027–06012 | B – 2 |
| 95027–06016 | E – 2 |
| 95027–06020 | B – 8 |
| | F – 15 |
| 95027–06025 | B – 6 |
| | B – 9 |
| | F – 9 |
| 95304–06700 | D – 2 |
| 95304–08700 | E – 15 |
| 95307–08600 | E – 7 |
| 95604–06200 | E – 13 |
| 95604–10200 | E – 6 |
| 95606–06100 | E – 10 |
| 95607–04100 | D – 6 |
| 95607–05100 | D – 6 |
| 95607–05200 | G – 5 |
| 95607–06100 | D – 6 |
| | F – 15 |
| 95607–06200 | D – 14 |
| 95607–08200 | F – 3 |
| 95607–10200 | D – 10 |

| PART NO. | GRID NO. |
|---|---|
| 95607–10200 | D – 8 |
| | E – 12 |
| 95617–08625 | B – 2 |
| 95707–05500 | D – 6 |
| | G – 3 |
| 95707–06500 | D – 5 |
| | E – 3 |
| 95807–06008 | E – 13 |
| 95807–06010 | G – 5 |
| 95807–06012 | F – 7 |
| 95814–06050 | C – 7 |
| 95817–06010 | B – 9 |
| 95817–06020 | B – 14 |
| 95817–06025 | C – 11 |
| 95817–06045 | B – 7 |
| | C – 7 |
| 95817–06055 | C – 7 |
| 95817–06060 | C – 7 |
| 95817–06065 | C – 7 |
| 95817–06070 | C – 7 |
| 95817–06110 | D – 14 |
| 95817–08025 | C – 5 |
| 95817–08040 | C – 6 |
| 95817–08050 | C – 7 |
| 95824–06020 | D – 2 |
| 95827–06020 | B – 15 |
| 95827–06025 | B – 9 |
| | G – 5 |
| 95827–08025 | D – 3 |
| 97007–06016 | D – 9 |
| 97007–06030 | D – 5 |
| 97080–05012 | C – 5 |
| 97080–06008 | C – 5 |
| 97702–40610 | F – 10 |
| | F – 11 |
| 97704–40012 | F – 6 |
| 97707–40012 | E – 3 |
| | G – 5 |
| 97707–50016 | F – 13 |
| | F – 14 |
| | F – 7 |
| | G – 2 |
| 97707–60025 | G – 2 |
| 98502–04012 | E – 10 |
| 98507–03008 | D – 14 |
| 98507–04008 | F – 10 |
| | F – 11 |
| 98507–04010 | F – 15 |

| PART NO. | GRID NO. |
|---|---|
| 98507–05010 | C – 2 |
| 98507–05012 | C – 2 |
| | D – 15 |
| 98507–05022 | F – 15 |
| 98507–05025 | B – 13 |
| | F – 15 |
| 98507–05035 | E – 9 |
| 98507–05045 | B – 13 |
| 98707–03016 | F – 15 |
| 98707–04008 | C – 2 |
| 98907–06016 | D – 4 |
| 99001–07600 | C – 11 |
| 99009–10400 | C – 12 |
| 99009–52500 | E – 6 |
| 99221–00180 | D – 14 |
| 99241–00080 | D – 7 |
| 99241–00100 | D – 5 |
| 99241–00320 | F – 6 |
| 99530–08012 | B – 12 |
| | C – 8 |
| | C – 9 |
| 99530–10014 | C – 7 |
| 99530–10114 | C – 7 |

| PART NO. | GRID NO. |
|---|---|

| PART NO. | GRID NO. |
|---|---|

| PART NO. | GRID NO. |
|---|---|

| PART NO. | GRID NO. |
|---|---|

| PART NO. | GRID NO. |
|---|---|

# CONTENTS

## ENGINE


CYLINDER . . . . . B2
CRANKSHAFT. PISTON . . . . . B3
VALVE . . . . . B4
CAMSHAFT. CHAIN . . . . . B6
WATER PUMP . . . . . B7
RADIATOR. HOSE . . . . . B9
OIL PUMP . . . . . B11
OIL CLEANER . . . . . B12
INTAKE . . . . . B13
AIR INDUCTION SYSTEM . . . . . B15
CARBURETOR . . . . . C2
EXHAUST . . . . . C5
CRANKCASE . . . . . C7
CRANKCASE COVER 1 . . . . . C8
STARTER . . . . . C10
CLUTCH . . . . . C11
TRANSMISSION . . . . . C13
SHIFT CAM. FORK . . . . . C15
SHIFT SHAFT . . . . . D2


## CHASSIS


FRAME . . . . . D3
FENDER . . . . . D5
SIDE COVER . . . . . D7
REAR ARM . . . . . D8
REAR SUSPENSION . . . . . D10
STEERING . . . . . D11
FRONT FORK . . . . . D12
FUEL TANK . . . . . D14
SEAT . . . . . E3
FRONT WHEEL . . . . . E4
FRONT BRAKE CALIPER . . . . . E5
REAR WHEEL . . . . . E6
REAR BRAKE CALIPER . . . . . E8
STEERING HANDLE. CABLE . . . . . E9
FRONT MASTER CYLINDER . . . . . E10
STAND. FOOTREST . . . . . E12
REAR MASTER CYLINDER . . . . . E15
COWLING 1 . . . . . F3
COWLING 2 . . . . . F5
GENERATOR . . . . . F8
STARTING MOTOR . . . . . F9
FLASHER LIGHT . . . . . F10
METER . . . . . F12
HEADLIGHT . . . . . F13
TAILLIGHT . . . . . F14
HANDLE SWITCH. LEVER . . . . . F15
ELECTRICAL 1 . . . . . G2
ELECTRICAL 2 . . . . . G4


## INDEX


NUMERICAL INDEX . . . . . M1